Process Gas Equipment

New

Regulators
Diaphragm Valves
Check Valves
Vacuum Generators
Flow Switches

APTech
ADVANCED PRESSURE TECHNOLOGY

SMC

CAT.ES100-88A

Regulators

For ultra high purity (UHP)

For UHP gas delivery in semiconductor and other clean industries.

AP9000

AP1600/AP1900

AP1700

AP1400T

AP1200

AP2700

AP1000/AP1100/AP1500

AP500

Series AP

P.2 to 23

SL5500

SL5400/SL5800

SL5200

Series SL

P.24 to 31

AZ1200/AZ1300/AZ1400T

AZ1000/AZ1100/AZ1500

AZ9200

Series AZ

P.32 to 45

BP1000 Welded

Series BP

P.68, 69

Regulators

For air operated applications

AP10PA/AP15PA AP12PA/AP14PAT

Series AP□PA

P.70 to 77

AZ10PA/AZ15PA AZ12PA/AZ14PAT

Series AZ□PA

P.78 to 85

For general applications

For wide variety of applications from semiconductor to general.

AK1700 AK1000/AK1500 AK1200/ AK1300/ AK1400T AK9200

Series AK

P.46 to 59

BP1000

Back Pressure Regulator

Series BP

P.66, 67

For air operated applications

AK10PA/AK15PA AK12PA/AK14PAT

Series AK□PA

P.86 to 93

For high pressure applications

KT10 KT10 Welded connection KT12

Series KT

P.60 to 65

Diaphragm Valves

For ultra high purity (UHP)

For UHP gas delivery in semiconductor and other clean industries.

Air operated type

Series **AP**

P.100 to 113

Manually operated type

Series **AP**

P.114 to 123

Check Valve

Series **AP64**

P.128, 129

Vacuum Generators

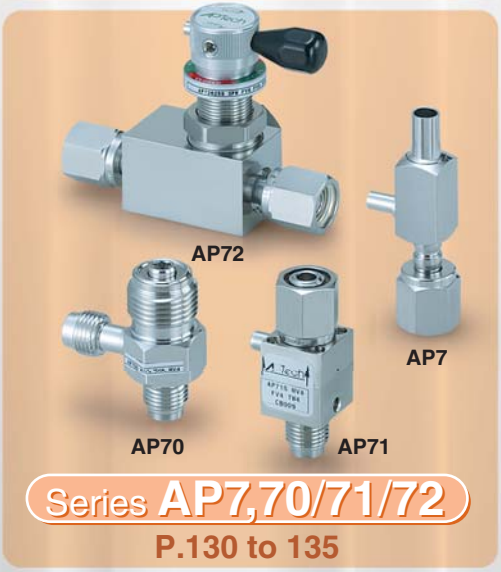

Series **AP7,70/71/72**

P.130 to 135

Flow Switches

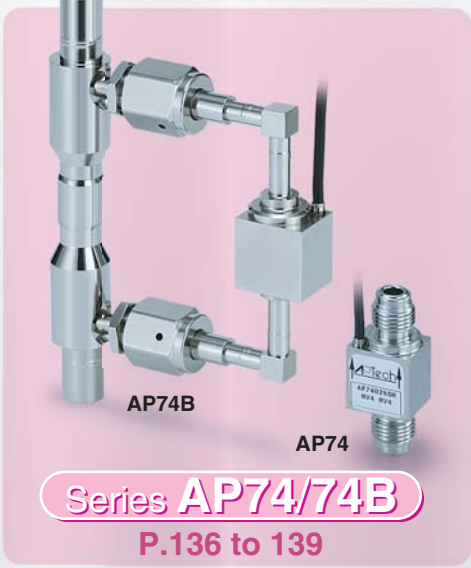

Series **AP74/74B**

P.136 to 139

SMC

Series Features

●Standard ○Selectable by model or option

	Series AP	Series AZ	Series AK
Application	Ultra High Purity (UHP)		General applications
Body material	316L SS Secondary remelt	316L SS	●316 SS ○Brass
EP	Electropolish + Passivation		
Surface finish µin. (µm)	Ra max ●15 µin. (0.4 µm) ○10 µin. (0.25 µm) ○7 µin. (0.18 µm) ○5 µin. (0.13 µm)	Ra ●10 µin. (0.25 µm) ○25 µin. (0.62 µm)*1)	Ra ●32 µin. (0.8 µm)
Connection type: Connection	Welded		Threaded
Connection type: Fitting	●Face seal ○Tube stub weld		●NPT ○Compression
Cleanroom Assembly	●	●	
N_2 Testing	●	●	●
Helium Testing	●	●	

*1) Optional finish not available on all AZ series.

Regulator *Series AP/SL*

Series			Application		Construction		Material		Max. inlet pressure	
			Distribution (Point of use)	Source (Cylinder)	Tied diaphragm	Springless	Body *1)	Hastelloy® Internal	psig	(MPa)
Single stage	AP1000		●	△			316L VAR	○	300 3500	2.1 24.1
Single stage	AP1100		●	●*4)			316L VAR	○	300	2.1
Single stage	AP1500			●	●		316L VAR	○	3500	24.1
Single stage	SL5500		●	●	●	●	316L VAR	○	3500	24.1
Single stage	AP1600		●				316L VAR	○	100 3500	0.7 24.1
Single stage	AP1900			●	●		316L VAR	○	3500	24.1
Single stage	SL5400		●	●	●	●	316L VAR	○	1000	6.9
Single stage	SL5800		●		●	●	316L VAR		300	2.1
Single stage	AP1400T		●	●	●		316L VAR	●	300 2300 ●2300 ○3000	2.1 15.9 ●15.9 ○20.7
Single stage	AP1200		●	●	●		316L VAR	○	1700 ●1700 ○3000	11.7 ●11.7 ○20.7
Single stage	AP9000		●	●	●		316L	●	1700	11.7
Single stage	AP9100		●	●	●		316L	●	800	5.5
Single stage	AP9115								250	1.7
Single stage (compact)	AP500		●				316L VAR	○	150	1.0
Single stage (compact)	SL5200		●		●	●	316L VAR	○	150	1.0
Two stage	AP1700			●	●		316L VAR	○	3500	24.1
Two stage	AP2700			●	●		316L VAR	○	3500	24.1

*1) 316L VAR : 316L SS secondary remelt　316L : 316L SS
*2) In accordance with SEMI F32.
*3) At 150 psig (1.0 MPa) inlet pressure. Figure varies depending on gas and operating pressures.
*4) For low vapor pressure gases.
Hastelloy® is a registered trademark of Haynes International.

●Standard ○Selectable by model or option
△May be selected for source applications of inert gases, though tied diaphragm is recommended.

Outlet pressure			Cv *2)	Flow, N_2 *3) slpm	Connection size inch	Connection type		Page
psig	(MPa)	Sub-atmospheric (Absolute)				Connection	Fittings	
1 to 10	0.007 to 0.07							
1 to 30 2 to 60 2 to 100 5 to 150	0.007 to 0.2 0.014 to 0.4 0.014 to 0.7 0.034 to 1.0		●0.09 ○0.15	●30 ○120 (HF opt.)	1/4 3/8			P.4
100 mmHg absolute to 10 psig	-88 kPa to 0.07 MPa	●	0.05	0.5	1/4 3/8			P.16
1 to 30 2 to 60 2 to 100 5 to 150	0.007 to 0.2 0.014 to 0.4 0.014 to 0.7 0.034 to 1.0		0.09	30	1/4 3/8			P.6
100mmHg abs. to 30psig	-88kPa to 0.2MPa							
1 to 30 1 to 60 2 to 100	0.007 to 0.2 0.007 to 0.4 0.014 to 0.7	○	0.09	30	1/4 3/8			P.26
1 to 10	0.007 to 0.07							
1 to 30 2 to 60 2 to 100	0.007 to 0.2 0.014 to 0.4 0.014 to 0.7		0.13	100	1/4 3/8			P.8
1 to 10 1 to 30 2 to 60 2 to 100 5 to 150	0.007 to 0.07 0.007 to 0.2 0.014 to 0.4 0.014 to 0.7 0.034 to 1.0		●0.13 ○0.16	●100 ○150 (HF opt.)	1/4 3/8 1/2			P.10
1 to 30 1 to 60 2 to 100	0.007 to 0.2 0.007 to 0.4 0.014 to 0.7		0.23	120	1/4 3/8 1/2	Welded	●Face seal ○Tube stub	P.28
1 to 30 1 to 60 2 to 100	0.007 to 0.2 0.007 to 0.4 0.014 to 0.7		0.4	200	1/4 3/8 1/2			P.30
100mmHg abs. to 30psig	-88kPa to 0.2MPa							
1 to 30 2 to 60	0.007 to 0.2 0.014 to 0.4	○	0.45	400	1/4 3/8 1/2			P.12
2 to 100 5 to 150	0.014 to 0.7 0.034 to 1.0							
1 to 30 2 to 60	0.007 to 0.2 0.014 to 0.4		●0.65 ○1.1	●800 ○1000 (HF opt.) ○1500 (FC opt.)	1/4 3/8 1/2 3/4			P.14
2 to 100 5 to 150	0.014 to 0.7 0.034 to 1.0							
5 to 100 Preset to 300	0.034 to 0.7 Preset to 2.1		3.0	2000	1/2 3/4 1			P.22
5 to 100	0.034 to 0.7		4.0	5000	1/2 3/4 1			
5 to 150	0.034 to 1.0							
100mmHg abs. to 10psig	-88kPa to 0.07MPa							
0.5 to 10 0.5 to 30 1 to 60 1 to 100	0.0034 to 0.07 0.0034 to 0.2 0.007 to 0.4 0.007 to 0.7	○	●0.06 ○0.1	●15 ○30 (HF opt.)	1/4	Welded	●Face seal ○Tube stub	P.2
100mmHg abs. to 10psig	-88kPa to 0.07MPa							
0.5 to 10 0.5 to 30 1 to 60 1 to 100	0.0034 to 0.07 0.0034 to 0.2 0.007 to 0.4 0.007 to 0.7	○	●0.07 ○0.15	●30 ○130 (HF opt.)	1/4 3/8			P.24
1 to 30 2 to 60 2 to 100	0.007 to 0.2 0.014 to 0.4 0.014 to 0.7		0.05	30	1/4 3/8	Welded	●Face seal ○Tube stub	P.18
1 to 30 2 to 60 2 to 100 3 to 120	0.007 to 0.2 0.014 to 0.4 0.014 to 0.7 0.021 to 0.8		0.105	150	1/4 3/8			P.20

Regulator *Series AZ*

Series			Application		Construction		Material		Max. inlet pressure	
			Distribution (Point of use)	Source (Cylinder)	Tied diaphragm	Springless	Body *1)	Hastelloy® Internal	psig	(MPa)
Single stage	AZ1000		●	△			316L	○	300 3500	2.1 24.1
	AZ1100		●	●*4)				○	300	2.1
	AZ1500			●	●			○	3500	24.1
	AZ1400T		●	●	●			●	300 2300 ●2300 ○3000	2.1 15.9 ●15.9 ○20.7
	AZ1300		●						300	2.1
	AZ1200	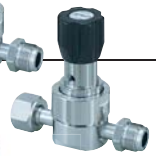	●	●	●			○	1700 ●1700 ○3000	11.7 ●11.7 ○20.7
	AZ9200		●		●				300	2.1

Regulator *Series AK*

Series			Application		Construction		Material		Max. inlet pressure	
			Distribution (Point of use)	Source (Cylinder)	Tied diaphragm	Springless	Body *1)	Hastelloy® Internal	psig	(MPa)
Single stage	AK1000		●	△			●316 ○B	○	300 3500	2.1 24.1
	AK1500			●	●			○	3500	24.1
	AK1400T	 	●	●	●			●	300 2300 ●2300 ○3000	2.1 15.9 ●15.9 ○20.7
	AK1300	 	●						300	2.1
	AK1200		●	●	●			○	1700 ●1700 ○3000	11.7 ●11.7 ○20.7
	AK9200		●		●				300	2.1
Two stage	AK1700			●	●		●316 ○B	○	3500	24.1

*1) 316L : 316L SS　316 : 316 SS　B : Brass
*2) In accordance with SEMI F32.
*3) At 150 psig (1.0 MPa) inlet pressure. Figure varies depending on gas and operating pressures.
*4) For low vapor pressure gases.
Hastelloy® is a registered trademark of Haynes International.

●Standard ○Selectable by model or option
△May be selected for source applications of inert gases, though tied diaphragm is recommended.

Outlet pressure			Cv *2)	Flow, N_2 *3) slpm	Connection size inch	Connection type		Page
psig	(MPa)	Sub-atmospheric (Absolute)				Connection	Fittings	
1 to 10 1 to 30 2 to 60 2 to 100 5 to 150	0.007 to 0.07 0.007 to 0.2 0.014 to 0.4 0.014 to 0.7 0.034 to 1.0		●0.09 ○0.15	●30 ○120 (HF opt.)	1/4 3/8	Welded	●Face seal ○Tube stub	P.32
100 mmHg absolute to 10 psig	-88 kPa to 0.07 MPa	●	0.05	0.5	1/4 3/8			P.44
1 to 30 2 to 60 2 to 100 5 to 150	0.007 to 0.2 0.014 to 0.4 0.014 to 0.7 0.034 to 1.0		0.09	30	1/4 3/8			P.34
100mmHg abs. to 30psig 1 to 30 2 to 60 2 to 100 5 to 150	-88kPa to 0.2MPa 0.007 to 0.2 0.014 to 0.4 0.014 to 0.7 0.034 to 1.0	○	0.45	400	1/4 3/8 1/2			P.36
1 to 30 2 to 60 2 to 100 5 to 150	0.007 to 0.2 0.014 to 0.4 0.014 to 0.7 0.034 to 1.0		1.1	1000	1/4 3/8 1/2			P.38
1 to 30 2 to 60 2 to 100 5 to 150	0.007 to 0.2 0.014 to 0.4 0.014 to 0.7 0.034 to 1.0		●0.65 ○1.1	●800 ○1000 (HF opt.) ○1500 (FC opt.)	1/4 3/8 1/2			P.40
1 to 30 2 to 60 2 to 100 5 to 150	0.007 to 0.2 0.014 to 0.4 0.014 to 0.7 0.034 to 1.0		1.6	2000	3/4 1			P.42

Outlet pressure			Cv *2)	Flow, N_2 *3) slpm	Connection size inch	Connection type		Page
psig	(MPa)	Sub-atmospheric (Absolute)				Connection	Fittings	
0.5 to 10 1 to 30 2 to 60 2 to 100 5 to 150 5 to 200 5 to 300 10 to 500	0.007 to 0.07 0.007 to 0.2 0.014 to 0.4 0.014 to 0.7 0.034 to 1.0 0.034 to 1.4 0.034 to 2.1 0.07 to 3.4		●0.09 ○0.15	●30 ○120 (HF opt.)	1/4 3/8	Threaded	●NPT ○Compression	P.46
1 to 30 2 to 60 2 to 100 5 to 150	0.007 to 0.2 0.014 to 0.4 0.014 to 0.7 0.034 to 1.0		0.09	30	1/4 3/8			P.48
100mmHg abs. to 30psig 1 to 30 2 to 60 2 to 100 5 to 150	-88kPa to 0.2MPa 0.007 to 0.2 0.014 to 0.4 0.014 to 0.7 0.034 to 1.0	○	0.45	400	1/4 3/8 1/2			P.50
1 to 30 2 to 60 2 to 100 5 to 150	0.007 to 0.2 0.014 to 0.4 0.014 to 0.7 0.034 to 1.0		1.1	1000	1/4 3/8 1/2			P.52
1 to 30 2 to 60 2 to 100 5 to 150	0.007 to 0.2 0.014 to 0.4 0.014 to 0.7 0.034 to 1.0		●0.65 ○1.1	●800 ○1000 (HF opt.) ○1500 (FC opt.)	1/4 3/8 1/2			P.54
1 to 30 2 to 60 2 to 100 5 to 150	0.007 to 0.2 0.014 to 0.4 0.014 to 0.7 0.034 to 1.0		1.6	2000	3/4			P.56
1 to 30 2 to 60 2 to 100 5 to 200	0.007 to 0.2 0.014 to 0.4 0.014 to 0.7 0.034 to 1.4		0.05	30	1/4 3/8	Threaded	●NPT ○Compression	P.58

Air Operated Regulator *Series AP/AZ/AK*

Series			Application		Construction		Material		Max. inlet pressure		
			Distribution (Point of use)	Source (Cylinder)	Tied diaphragm	Springless	Body *1)	Hastelloy® Internal	psig	(MPa)	
Single stage	AP10PA		●	△			316L VAR	○	3500	24.1	
	AP15PA			●	●			○	3500	24.1	
	AP14PAT		●	●	●			●	●2300 ○3000	●15.9 ○20.7	
	AP12PA		●	●	●			○	●1700 ○3000	●11.7 ○20.7	
	AZ10PA		●	△			316L	○	3500	24.1	
	AZ15PA			●	●			○	3500	24.1	
	AZ14PAT		●	●	●			●	●2300 ○3000	●15.9 ○20.7	
	AZ12PA		●	●	●			○	●1700 ○3000	●11.7 ○20.7	
	AK10PA		●	△			●316 ○B	○	3500	24.1	
	AK15PA			●	●			○	3500	24.1	
	AK14PAT		●	●	●			●	●2300 ○3000	●15.9 ○20.7	
	AK12PA		●	●	●			○	●1700 ○3000	●11.7 ○20.7	

*1) 316L VAR : 316L SS secondary remelt　316L : 316L SS
*2) In accordance with SEMI F32.
*3) At 150 psig (1.0 MPa) inlet pressure. Figure varies depending on gas and operating pressures.
Hastelloy® is a registered trademark of Haynes International.

●Standard ○Selectable by model or option
△May be selected for source applications of inert gases, though tied diaphragm is recommended.

Outlet pressure			Cv *2)	Flow, N_2 *3) slpm	Connection size inch	Connection type		Page
psig	(MPa)	Sub-atmospheric (Absolute)				Connection	Fittings	
7 to 150	0.05 to 1.0		●0.09 ○0.15	●30 ○120 (HF opt.)	1/4 3/8	Welded	●Face seal ○Tube stub	P.70
7 to 150	0.05 to 1.0		0.09	30	1/4 3/8			P.72
7 to 150	0.05 to 1.0		0.45	400	1/4 3/8 1/2			P.74
7 to 150	0.05 to 1.0		●0.65 ○1.1	●800 ○1000 (HF opt.)	1/4 3/8 1/2 3/4			P.76
7 to 150	0.05 to 1.0		●0.09 ○0.15	●30 ○120 (HF opt.)	1/4 3/8	Welded	●Face seal ○Tube stub	P.78
7 to 150	0.05 to 1.0		0.09	30	1/4 3/8			P.80
7 to 150	0.05 to 1.0		0.45	400	1/4 3/8 1/2			P.82
7 to 150	0.05 to 1.0		●0.65 ○1.1	●800 ○1000 (HF opt.)	1/4 3/8 1/2 3/4			P.84
7 to 150	0.05 to 1.0		●0.09 ○0.15	●30 ○120 (HF opt.)	1/4 3/8	Threaded	●NPT ○Compression	P.86
7 to 150	0.05 to 1.0		0.09	30	1/4 3/8			P.88
7 to 150	0.05 to 1.0		0.45	400	1/4 3/8 1/2			P.90
7 to 150	0.05 to 1.0		●0.65 ○1.1	●800 ○1000 (HF opt.)	1/4 3/8 1/2 3/4			P.92

High Pressure Regulator *Series KT*

Series		Body material *1)	Max. inlet pressure psig	Max. inlet pressure (MPa)	Outlet pressure psig	Outlet pressure (MPa)
KT10		S	10000	69	5 to 500 5 to 800 10 to 1500 15 to 2500 25 to 4000 50 to 6000 100 to 10000	0.034 to 3.4 0.034 to 5.5 0.07 to 10.3 0.1 to 17.2 0.17 to 27.6 0.34 to 41.4 0.7 to 69
		B	6000	41.4	5 to 500 5 to 800 10 to 1500 15 to 2500 25 to 4000 50 to 6000	0.034 to 3.4 0.034 to 5.5 0.07 to 10.3 0.1 to 17.2 0.17 to 27.6 0.34 to 41.4
		316L	4000	27.6	5 to 500 5 to 800 10 to 1500 15 to 2500 25 to 4000	0.034 to 3.4 0.034 to 5.5 0.07 to 10.3 0.1 to 17.2 0.17 to 27.6
KT12		S	6000	41.4	5 to 120 5 to 300 5 to 600 10 to 1000 15 to 1500 25 to 2500	0.034 to 0.8 0.034 to 2.1 0.034 to 4.1 0.07 to 6.9 0.1 to 10.3 0.17 to 17.2
		B	5000	34.5		

Back Pressure Regulator *Series BP*

Series		Body material *1)	Operating pressure psig	Operating pressure (MPa)	Cv *2)	Connection size inch
BP1000		316L VAR	0.5 to 10 1 to 30 2 to 60 5 to 100 15 to 200 15 to 300	0.0034 to 0.07 0.007 to 0.2 0.014 to 0.4 0.034 to 0.7 0.1 to 1.4 0.1 to 2.1	0.3	1/4 3/8
		●316 ○B				1/4

*1) 316L VAR : 316L SS secondary remelt 316L : 316L SS 316 : 316 SS S : 300 SS series B : Brass
*2) In accordance with SEMI F32.

Pressure Gauges (For UHP and general applications) ▶▶▶ P.94

●Standard ○Selectable by model or option

	Cv *2)	Connection size inch	Connection type		Page
			Connection	Fittings	
	●0.06 ○0.12	1/4	Threaded	NPT	**P.60**
			Welded	Face seal	**P.62**
	●0.8 ○2.0	1/2 3/4	Threaded	NPT	**P.64**

	Connection type		Page
	Connection	Fittings	
	Welded	●Face seal ○Tube stub	**P.68**
	Threaded	●NPT ○Compression	**P.66**

Diaphragm Valves (Air operated)

Series			Application		Status		Body material *1)	
			Distribution (Point of use)	Source (Cylinder)	N.C.	N.O.		
Air operated	AP3540		●		●		316L VAR	
	AP3550		●	△	●			
	AP3580		●			●		
	AP3000			●	●			
	AP4540		●		●			
	AP4550		●	△	●			
	AP4580		●			●		
	AP3113		●	●	●			
	AP3130		●	●	●			
	AP3700		●	△	●			
	AP3708		●			●		

Diaphragm Valves (Two step mode)

Series			Application		Status		Body material *1)	
			Distribution (Point of use)	Source (Cylinder)	N.C.	N.O.		
Air operated Two step mode	AP3571		●		●		316L VAR	
	AP4571		●		●			

*1) 316L VAR : 316L SS secondary remelt
*2) In accordance with SEMI F32.

●Standard ○Selectable by model or option
△Source applications for maximum source pressure of 250 psig (1.7 MPa) or less.

Max. operating pressure		Cv *2)	LOTO	Connection size inch	Connection type		Page
psig	(MPa)				Connection	Fitting	
125	0.9	0.29	○	1/4 3/8	Welded	●Face seal ○Tube stub	P.100
250	1.7	0.29					
250	1.7	0.29	○				
3000	20.7	●0.23 ○0.28	○	1/4 3/8			P.104
125	0.9	0.5	○	1/4 3/8			P.102
250	1.7	0.5					
250	1.7	0.5	○				
1300	9.0	1.0	○	1/4 3/8 1/2 3/4			P.106
3000	20.7	0.7	○				
250	1.7	2.8		3/8 1/2 3/4			P.108
250	1.7	2.8					

Max. operating pressure		Cv *2)	LOTO	Connection size inch	Connection type		Page
psig	(MPa)				Connection	Fitting	
125	0.9	0.29		1/4 3/8	Welded	●Face seal ○Tube weld	P.110
125	0.9	0.5					

Diaphragm Valves (Manual)

Series			Application		Knob	Body material *1)	
			Distribution (Point of use)	Source (Cylinder)			
Manual	AP3600		●	●	Multi turn round knob	316L VAR	
	AP3625		●	●	1/4 turn lever knob		
	AP3650		●	●	1/4 turn indicating round knob		
	AP3657		●	●	Pull twist round knob		
	AP4600		●	△	Multi turn round knob		
	AP4625		●	△	1/4 trun lever knob		
	AP4650		●	△	1/4 turn indicating round knob		
	AP4657		●	△	Pull twist round knob		
	AP3100		●	●	Multi turn round knob		
	AP3125		●	●	1/4 turn lever knob		
	AP3150		●	●	1/4 turn indicating round knob		
	AP3157		●	●	Pull twist round knob		
	AP3800		●	△	Round knob		
	AP3900		●	△	Pull twist round knob		

Diaphragm Valves (Metal seated)

Series			Application		Status or Knob	Body material *1)	
			Distribution (Point of use)	Source (Cylinder)			
Air operated	AP3200		●		N.C.	316L VAR	
Manual	AP3260		●		Multi turn round knob		

*1) 316L VAR : 316L SS secondary remelt *2) In accordance with SEMI F32.

Option (LOTO, Operational Safety Device) ▶▶▶ P.124 Porting Guide ▶▶▶ P.125

●Standard ○Selectable by model or option
△Source applications for maximum source pressure of 250 psig (1.7 MPa) or less.

	Max. operating pressure		Cv *2)	LOTO	Connection size inch	Connection type		Page
	psig	(MPa)				Connection	Fitting	
	3000	20.7	0.29		1/4 3/8	Welded	●Face seal ○Tube stub	P.114
				○				
				●				
	250	1.7	0.5		1/4 3/8			P.116
				○				
				●				
	3000	20.7	●0.7 ○1.3		1/4 3/8 1/2 3/4			P.118
	3000	20.7	1.0	○				
	1300	9.0	1.0					
	1300	9.0	1.0	●				
	250	1.7	2.8		3/8 1/2 3/4			P.120
				●				

	Maximum inlet pressure		Cv *2)	LOTO	Connection size inch	Connections		Page
	psig	MPa				Connection	Fitting	
	125	0.9	0.27		1/4 3/8	Welded	●Face seal ○Tube weld	P.112
	125	0.9	0.27					P.122

Check Valve

●Standard ○Selectable by model or option

Series		Body material ∗1)	Max. operating pressure psig	Max. operating pressure (MPa)	Cracking pressure psid	Cracking pressure (MPa)	Cv ∗2)	Connection size inch	Connection type: Connection	Connection type: Fitting	Page
AP64		316L VAR	3500	24.1	3	0.023	0.4 max	1/4	Welded	●Face seal ○Tube stub	P.128

Vacuum Generator

Series		Body material ∗1)	Max. vacuum pressure in.Hg (Torr)	Max. vacuum pressure (kPa)	Modules ∗3)	Check valve cracking pressure psid	Check valve cracking pressure (MPa)	Constant bleed	Connection size inch	Connection type: Connection	Connection type: Fitting	Page
AP7		316L	-26 (100)	-88		—	—		1/4 3/8	Welded	●Face seal ○Tube stub	P.130
AP70		316L	-26 (100)	-88		—	—		1/4 3/8			P.130
AP71		316L	-26 (100)	-88	●	3	0.023	○	1/4 3/8			P.132
AP72	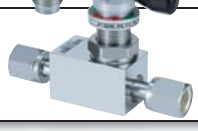	316L VAR	-26 (100)	-88	●	3	0.023	○	1/4 3/8			P.134

Flow Switch

Series		Body material ∗1)	Max. operating pressure psig	Max. operating pressure MPa	Flow, at 100 psig (0.69 MPa) N_2 slpm	Connection size inch	Connections: Connection	Connections: Fitting	Page
AP74		316L VAR	3500	24.1	2 5 10 25 50 100	1/4	Welded	●Face seal ○Tube stub	P.136
AP74B		316L	3500	24.1	225 350 500 950	1/2			P.138
			2400	16.3	1100 1650 2600	3/4			

∗1) 316L VAR : 316L SS secondary remelt 316L : 316L SS
∗2) In accordance with SEMI F32.
∗3) Monoblock vacuum generator, N_2 supply valve and check valve

Regulator and Valve Selection Guide ··· **Forward 19 to 25**
Technical Data/Glossary of Terms ····· **P.143, 144**

Regulator and Valve Selection Guide
Valve and Regulator Recommendations
for source and distribution application

This guide is a reference guide to help customers determine an appropriate AP Tech valve and regulator to be used in process gas systems. Before selecting a product, please make sure to read through this guide. For information and specifications related to the specific model, please refer to the catalog data sheet.

Precautions for selection

The guide's general recommendations are based upon typical appications from material point of view.
Some series are not available depending on the regulations in different countries so the selection should be made complying with the regulations in the countries where the product will be used.
In Japan since using compression fittings for toxic gas is prohibited, AP/AZ series should be used for toxic gas.
The proper regulator and valve selection can be significantly affected by parameters such as system design, flow duration, frequency of use, ambient conditions and outlet pressure. Please consult SMC for a specific recommendation beyond the scope of this document or if any doubt exists. It is important to understand that one may follow this guide's recommendation, yet have a failure due to a parameter specific to the given application, as noted. Restated, one may achieve higher or lower flow capacities than stipulated in this guide due to the parameters and conditions of a specific application and system design.

- **Source valves** are those on the upstream side of the pressure regulator in the source gas cabinet or bulk delivery system.
- **Distribution valves** are those on the downstream side of the pressure regulator in the source gas cabinet or bulk delivery system and used anywhere downstream of the regulator (s) for cylinder applications at point of use (POU) in valve manifold boxes (VMBs) and process tools.
- **Source regulators** are those used in the source gas cabinet or bulk delivery system.
- **Distribution regulators** are those used at point of use (POU) in valve manifold boxes (VMBs) and process tools. Recommendations are based on typical usage. Operating practices at a specific facility may require a different component selection.
- It is assumed that non-liquefied gas cylinders are switched over to a new cylinder when the pressure drops to 150 to 250 psig (1.0 to 1.7 MPa). Therefore, maximum recommended flow rates for source regulators and source valves assume 150 to 250 psig (1.0 to 1.7 MPa) inlet pressure for this gas.
- It is assumed that the cylinder pressure for liquefied gas systems is maintained at or above the vapor pressure at 16 °C. It is assumed that cylinders are switched over before the liquid is all vaporized into gas. Therefore, maximum recommended flow rates for **source regulators** are based on 16 °C vapor pressure at the regulator inlet for these gases.
- Absolute or very low positive pressure delivery bear close scrutiny. The AP1402TA delivers both sub-atmospheric and positive pressure (30 psig) equally well, whereas the AP1101 is strictly intended for sub-atmospheric pressure delivery (10 psig or less). If low flow and very low positive pressure delivery is desired, the AP1001 should be selected instead of the AP1101. The alternative is to select the AP1402TA which provides more flow capacity and the ability to delivery sub-atmospheric and positive pressure.
- The SHP option is for certain point of use applications in lieu of the SH option. The SHP designation provides Hastelloy® C-22 internals comprised of the poppet and diaphragm, whereas the SH option includes the nozzle.
- If a source regulator is listed as ① and ②, it means two stage regulation is required. The two regulators are in series with ① listed as the first stage and ② listed as the second stage.
- Valve recommendations are based on typical cylinder pressures and delivery line pressures. Pressure drop across valves at low pressures may be excessive and required a different valve selection.
- Valve recommendations are for the process line isolation. Purge and vent valves are not addressed in this document but generally an AP3000, AP3650, or AP3540 valve will provide sufficient flow capability. The valve series recommended were purposely limited for the sake of brevity. The model number indicates the basic size and rating. For example, manually operated valves are noted as AP3650 but an AP3600 or AP3625 would also be appropriate and equivalent selections.
- Vespel® seats are recommended for nitrous oxide (N_2O) and for souce applications for carbon dioxide (CO_2) with either continuous flow demand or flow rates in excess of 100 slpm.
- Heating may be required in the source manifold for some gases even when not stated due to duration of flow, ambient conditions, etc. When heating is recommended, appropriate heating method shall be selected depending on gas type. In general, the gas should be heated upstream of the pressure regulator.
- Distribution line pressure is assumed to be 60 psig (0.4 MPa) minimum or typical source pressure whichever is less. If the actual line pressure is higher, then higher flow rates than listed in this guideline can be obtained.

⚠ Caution

Since the product specified here is used under various operating conditions, its compatibility with fluid and specific equipment must be decided by the person who designs the equipment or decided its specifications based on necessary analysis and test results. The expected performance and safety assurance of the equipment will be the responsibility of the person who has determined its compatibility with the product regardless of any recommendation.
Proper installation, operation and maintenance are also required to assure safe, trouble free performance.

Recommended Model Selection Table

Please read the forward 15 before selecting a product.

How to read model number listed as recommendation.

Example	Valve	Regulator	
	AP3650 ❶	AP/AZ/AK1200 ❶ S ❷ VS ❸ HF ❹	AP/AZ1402T ❶ S ❷ A ❺

❶ **Series**
AP/AZ/AK1200: 3 series are recommended (AP1200, AZ1200, AK1200).
Valve: Only typical series is shown as recommendation and other models with same specifications (operating pressure, Cv) are also recommended.
For example, other than AP3650, AP3600/3625/3657 are also recommended.

❷ **Material**
S: Stainless steel body as standard design.
SH: Stainless steel body with Hastelloy® internals as it further improves corrosion resistance than S (standard design).
Either SH or SHP can be used with AP series regulators and SHP is used with AZ series regulators. (SHP provides Hastelloy® internals comprised of the poppet and diaphragm, whereas SH includes the nozzle.)
Material of stainless steel body varies depending on series.
- **AP series (except AP9000&9100) … 316L SS secondary remelt**
- **AZ series and AP9000&9100 … 316L SS**
- **AK series … 316 SS**

❸ **VS: Seat material is made of Vespel®.** (Only for specific series)
No code: PCTFE as standard design.

❹ **Option** (Only for specific series)
- **HF: High flow**
- **FC: Force compensation**
- **HR: High inlet pressure**

❺ **A: Delivery of sub-atmospheric pressure.** (Only for specific series)

For more details, please refer to catalog.

Process Gas \ Application	Valve				Regulator			
	Source applications		Distribution applications		Source applications		Distribution applications	
	Maximum flow (slpm)	Recommendation	Maximum flow (slpm)	Recommendation	Maximum flow (slpm)	Recommendation	Maximum flow (slpm)	Recommendation
Acetylene ∗ (C_2H_2)	230	**AP3000**	25	**AP3540**	3	**AP/AZ/AK1500S**	3	**AP/AZ/AK1000S**
		AP3650		**AP3650**	50	**AP/AZ/AK1400TS**	6	**AP/AZ/AK1000S HF**
	280	**AP3002**	45	**AP4540**	75	**AP/AZ/AK1200S**	50	**AP/AZ/AK1400TS**
		AP3650		**AP4650**			75	**AP/AZ/AK1200S**
			400	**AP3700**			95	**AP/AZ/AK1200S HF**
				AP3800				**AZ/AK1300S**
Air	185	**AP3000**	90	**AP3540**	30	**AP/AZ/AK1500S**	30	**AP/AZ/AK1000S**
		AP3650		**AP3650**	100	**AP1900S**	50	**AP/AZ/AK1000S HF**
	225	**AP3002**	160	**AP4540**	200	**AP/AZ/AK1400TS**	150	**AP/AZ/AK1400TS**
		AP3650		**AP4650**	800	**AP/AZ/AK1200S HR**	400	**AP/AZ/AK1200S**
		AP3100		**AP3800**			600	**AP/AZ/AK1200S HF**
	550	**AP3130**	890	**AP3700**				**AZ/AK1300S**
	475	**AP3125**		**AP3800**				
Ammonia (NH_3)	250	**AP3540**	100	**AP3540**	5	**AP/AZ/AK1500S**	5	**AP/AZ/AK1000S**
		AP3650		**AP3650**	50	**AP/AZ/AK1400TS**	30	**AP/AZ/AK1000S HF**
	450	**AP4540**	225	**AP4540**	75	**AP/AZ/AK1200S**	60	**AP/AZ/AK1400TS**
		AP4650		**AP4650**	400	**AP/AZ/AK1200S**	125	**AP/AZ/AK1200S**
	1000	**AP3113**	1000	**AP3700**	600	**AP/AZ/AK1200S HF**	250	**AP/AZ/AK1200S HF**
		AP3125		**AP3800**	1100	**AP9100S**		**AZ/AK1300S**
							500	**AP/AZ/AK1200S FC**
							1000	**AP9100S**
Argon (Ar)	200	**AP3000**	80	**AP3540**	10	**AP/AZ/AK1500S**	10	**AP/AZ/AK1000S**
		AP3650		**AP3650**	100	**AP1900S**	25	**AP/AZ/AK1000S HF**
	350	**AP3002**	150	**AP4540**	300	**AP1900S HF**	50	**AP/AZ/AK1400TS**
		AP3650		**AP4650**	1500	**AP/AZ/AK1200S HR**	100	**AP/AZ/AK1200S**
	1000	**AP3130**	800	**AP3700**			200	**AP/AZ/AK1200S HF**
		AP3125		**AP3800**				**AZ/AK1300S**
							400	**AP/AZ/AK1200S FC**
							1000	**AP9100S**

∗ 15 psig (0.1MPa) maximum source regulator outlet pressure.
▬ denotes heating required to achieve stated flow.

Recommended Model Selection Table

Please read the forward 15 before selecting a product.

Process Gas \ Application	Valve				Regulator			
	Source applications		Distribution applications		Source applications		Distribution applications	
	Maximum flow (slpm)	Recommendation	Maximum flow (slpm)	Recommendation	Maximum flow (slpm)	Recommendation	Maximum flow (slpm)	Recommendation
Arsine (AsH_3)	140	**AP3540**	55	**AP3540**	5	**AP/AZ/AK1500S**	5	**AP/AZ/AK1000S**
		AP3650		**AP3650**	40	**AP/AZ/AK1400TS**	20	**AP/AZ/AK1000S HF**
	240	**AP4540**	95	**AP4540**				
		AP4650		**AP4650**				
Arsine Mixtures (Nitrogen Balance)	185	**AP3000**	90	**AP3540**	15	**AP/AZ/AK1500S**	15	**AP/AZ/AK1000S**
		AP3650		**AP3650**	50	**AP1900S**	50	**AP/AZ/AK1000S HF**
	225	**AP3002**	160	**AP4540**	150	**AP/AZ/AK1400TS**	150	**AP/AZ/AK1400TS**
		AP3650		**AP4650**				
Boron Trichloride (BCl_3)	20	**AP4540**	15	**AP4540**	6	**AP/AZ/AK1402TSA**	0.4	**AP/AZ/AK1101SH**
		AP4650		**AP4650**			6	**AP/AZ/AK1402TSA**
Boron Trichloride Mix (Nitrogen Balance)	185	**AP3000**	90	**AP3540**	15	**AP/AZ/AK1500S**	15	**AP/AZ/AK1000S**
		AP3650		**AP3650**	60	**AP/AZ/AK1400TS**	30	**AP/AZ/AK1000S HF**
	225	**AP3002**	160	**AP4540**			60	**AP/AZ/AK1400TS**
		AP3650		**AP4650**				
Boron Trifluoride (BF_3)	115	**AP3000**	60	**AP3540**	5	**AP/AZ/AK1500S**	5	**AP/AZ/AK1000S**
		AP3650		**AP3650**	25	**AP/AZ/AK1400TS**	10	**AP/AZ/AK1000S HF**
	145	**AP3002**	100	**AP4540**			25	**AP/AZ/AK1400TS**
		AP3650		**AP4650**				
Boron 11 Trifluoride ($^{11}BF_3$)	115	**AP3000**	60	**AP3540**	5	**AP/AZ/AK1500S**	5	**AP/AZ/AK1000S**
		AP3650		**AP3650**	25	**AP/AZ/AK1400TS**	10	**AP/AZ/AK1000S HF**
	145	**AP3002**	100	**AP4540**			25	**AP/AZ/AK1400TS**
		AP3650		**AP4650**				
Butene-1 (C_4H_8)	35	**AP3540**	30	**AP3540**	3	**AP/AZ/AK1500S**	3	**AP/AZ/AK1000S**
		AP3650		**AP3650**	50	**AP/AZ/AK1400TS**	5	**AP/AZ/AK1000S HF**
	65	**AP4540**	60	**AP4540**				
		AP4650		**AP4650**				
Carbon Dioxide (CO_2)	500	**AP3000**	75	**AP3540**	3	**AP/AZ/AK1500S**	8	**AP/AZ/AK1000S**
		AP3650		**AP3650**	75	**AP/AZ/AK1400TS**	20	**AP/AZ/AK1000S HF**
	700	**AP3002**	140	**AP4540**	150	**AP/AZ/AK1200S VS**	40	**AP/AZ/AK1400TS**
		AP3650		**AP4650**	500	**①AP/AZ/AK1225S VS**	100	**AP/AZ/AK1200S**
	2500	**AP3113**	750	**AP3700**		**②AP/AZ/AK1200S VS HF**	160	**AP/AZ/AK1200S HF**
		AP3125		**AP3800**	1000	**①AP9030S VS**		**AZ/AK1300S**
						②AP9100S VS	325	**AP/AZ/AK1200S FC**
							800	**AP9100S**
Carbon Monoxide (CO)	185	**AP3000**	90	**AP3540**	5	**AP/AZ/AK1500S**	5	**AP/AZ/AK1000S**
		AP3650		**AP3650**	15	**AP1900S**	15	**AP/AZ/AK1000S HF**
	225	**AP3002**	160	**AP4540**	50	**AP/AZ/AK1400TS**	50	**AP/AZ/AK1400TS**
		AP3650		**AP4650**				
Chlorine (Cl_2)	75	**AP3540**	50	**AP3540**	3	**AP/AZ/AK1500SH**	5	**AP/AZ/AK1000SH**
		AP3650		**AP3650**	50	**AP/AZ/AK1400TS**	15	**AP/AZ/AK1000SH HF**
	150	**AP4540**	100	**AP4540**	75	**AP/AZ/AK1200SH**	30	**AP/AZ/AK1400TS**
		AP4650		**AP4650**	200	**AP/AZ/AK1200SH HF**	75	**AP/AZ/AK1200SH**
	300	**AP3113**	400	**AP3700**			125	**AP/AZ/AK1200SH HF**
		AP3125		**AP3800**				**AZ/AK1300S**
							250	**AP/AZ/AK1200SH FC**
ChlorineTrifluoride (ClF_3)	20	**AP4540**	15	**AP4540**	6	**AP/AZ/AK1402TSA**	0.5	**AP/AZ/AK1101S**
		AP4650		**AP4650**			6	**AP/AZ/AK1402TSA**
Diborane Mixtures (Nitrogen Balance)	185	**AP3000**	90	**AP3540**	5	**AP1700S**	10	**AP/AZ/AK1000S**
		AP3650		**AP3650**	225	**AP2700S**	20	**AP/AZ/AK1000S HF**
	225	**AP3002**	160	**AP4540**				
		AP3650		**AP4650**				
Dichlorosilane (SiH_2Cl_2)	20	**AP4540**	20	**AP4540**	7	**AP/AZ1402TSA**	1	**AP1001S**
		AP4650		**AP4650**			7	**AP/AZ/AK1402TSA**
Diethyltelluride ($Te(C_2H_5)_2$)	70	**AP3000**	35	**AP3540**	3	**AP/AZ/AK1500S**	3	**AP/AZ/AK1000S**
		AP3650		**AP3650**	5	**AP1900S**	5	**AP/AZ/AK1000S HF**
	85	**AP3002**	60	**AP4540**	25	**AP/AZ/AK1400TS**	25	**AP/AZ/AK1400TS**
		AP3650		**AP4650**				
Dimethylsilane (C_2SiH_8)	14	**AP4540**	7	**AP4540**	3	**AP/AZ/AK1500S**	3	**AP/AZ/AK1000S**
		AP4650		**AP4650**	50	**AP/AZ/AK1400TS**	50	**AP/AZ/AK1400TS**
	150	**AP3700**	75	**AP3700**	75	**AP/AZ/AK1200S**	75	**AP/AZ/AK1200S**
		AP3800		**AP3800**				
Disilane (Si_2H_6)	14	**AP4540**	7	**AP4540**	1	**AP/AZ/AK1000S**	1	**AP/AZ/AK1000S**
		AP4650		**AP4650**	7	**AP/AZ/AK1402TSA**	7	**AP/AZ/AK1402TSA**

■ denotes heating required to achieve stated flow.
Please read the forward 16 regarding how to read model number listed as recommendation.

If ① and ② are indicated in front of a model number, it means two stage regulation is required. The two regulators are in series with ① listed as the first stage and ② listed as the second stage.

Recommended Model Selection Table

Please read the forward 15 before selecting a product.

Process Gas \ Application	Valve				Regulator			
	Source applications		Distribution applications		Source applications		Distribution applications	
	Maximum flow (slpm)	Recommendation	Maximum flow (slpm)	Recommendation	Maximum flow (slpm)	Recommendation	Maximum flow (slpm)	Recommendation
Ethylene (C_2H_4)	380	**AP3000**	90	**AP3540**	3	**AP/AZ/AK1500S**	3	**AP/AZ/AK1000S**
		AP3650		**AP3650**	50	**AP/AZ/AK1400TS**	5	**AP/AZ/AK1000S HF**
	485	**AP3002**	160	**AP4540**	75	**AP/AZ/AK1200S**	50	**AP/AZ/AK1400TS**
		AP3650		**AP4650**			75	**AP/AZ/AK1200S**
Fluorine(F_2)	10	**AP3200**	10	**AP3200**	Consult Factory		Consult Factory	
Fluorine Mixtures (10 %, 3.4 MPa) (Nitrogen Balance)	185	**AP3000**	90	**AP3540**	5	**AP/AZ/AK1500SH**	5	**AP/AZ/AK1000SH**
		AP3650		**AP3650**	25	**AP/AZ/AK1400TS**	10	**AP/AZ/AK1000SH HF**
	225	**AP3002**	160	**AP4540**			25	**AP/AZ/AK1400TS**
		AP3650		**AP4650**				
Germane (GeH_4)	10	**AP3540**	4	**AP3540**	1	**AP/AZ/AK1000S**	1	**AP/AZ/AK1000S**
		AP3650		**AP3650**	7	**AP/AZ/AK1402TSA**	7	**AP/AZ/AK1402TSA**
	18	**AP4540**	7	**AP4540**				
		AP4650		**AP4650**				
Germane Mixtures (Nitrogen Balance)	185	**AP3000**	90	**AP3540**	10	**AP/AZ/AK1500S**	10	**AP/AZ/AK1000S**
		AP3650		**AP3650**	20	**AP1900S**	20	**AP/AZ/AK1000S HF**
	225	**AP3002**	160	**AP4540**	50	**AP/AZ/AK1400TS**	50	**AP/AZ/AK1400TS**
		AP3650		**AP4650**				
Halocarbon 12 (CCl_2F_2)	55	**AP4540**	40	**AP4540**	3	**AP/AZ/AK1500S**	3	**AP/AZ/AK1000S**
		AP4650		**AP4650**	50	**AP/AZ/AK1400TS**	5	**AP/AZ/AK1000S HF**
							50	**AP/AZ/AK1400TS**
Halocarbon 12B2 (CBr_2F_2)	15	**AP4540**	15	**AP4540**	5	**AP/AZ1400TSA**	0.5	**AP/AZ1101S**
		AP4650		**AP4650**			5	**AP/AZ1402TSA**
Halocarbon 13 ($CClF_3$)	140	**AP3000**	40	**AP3540**	3	**AP/AZ/AK1500S**	3	**AP/AZ/AK1000S**
		AP3650		**AP3650**	50	**AP/AZ/AK1400TS**	5	**AP/AZ/AK1000S HF**
	170	**AP3002**	70	**AP4540**			50	**AP/AZ/AK1400TS**
		AP3650		**AP4650**				
Halocarbon 13B1 ($CBrF_3$)	110	**AP3540**	35	**AP3540**	3	**AP/AZ/AK1500S**	3	**AP/AZ/AK1000S**
		AP3650		**AP3650**	50	**AP/AZ/AK1400TS**	5	**AP/AZ/AK1000S HF**
	190	**AP4540**	65	**AP4540**			50	**AP/AZ/AK1400TS**
		AP4650		**AP4650**				
Halocarbon 14 (CF_4)	10	**AP3000**	50	**AP3540**	10	**AP/AZ/AK1500S**	5	**AP/AZ/AK1000S**
		AP3650		**AP3650**	40	**AP1900S**	15	**AP/AZ/AK1000S HF**
	200	**AP3002**	100	**AP4540**	80	**AP1900S HF**	30	**AP/AZ/AK1400TS**
		AP3650		**AP4650**	500	**AP/AZ/AK1200S HR**	60	**AP/AZ/AK1200S**
	600	**AP3130**	500	**AP3700**			100	**AP/AZ/AK1200S HF**
		AP3125		**AP3800**				**AZ/AK1300**
							250	**AP/AZ/AK1200S FC**
							500	**AP9100S**
Halocarbon 21 ($CHCl_2F$)	25	**AP4540**	15	**AP4540**	5	**AP/AZ/AK1402TSA**	0.5	**AP/AZ1101S**
		AP4650		**AP4650**				**AP1001S**
							5	**AP/AZ/AK1402TSA**
Halocarbon 23 (CHF_3)	115	**AP3000**	145	**AP3540**	10	**AP/AZ/AK1500S**	10	**AP/AZ/AK1000S**
		AP3650		**AP3650**	50	**AP/AZ/AK1400TS**	20	**AP/AZ/AK1000S HF**
	140	**AP3002**	250	**AP4540**			50	**AP/AZ/AK1400TS**
		AP3650		**AP4650**				
Halocarbon 32 (CH_2F_2)	140	**AP3000**	55	**AP3540**	3	**AP/AZ/AK1500S**	3	**AP/AZ/AK1000S**
		AP3650		**AP3650**	50	**AP/AZ/AK1400TS**	6	**AP/AZ/AK1000S HF**
	175	**AP3002**	100	**AP4540**	75	**AP/AZ/AK1200S**	50	**AP/AZ/AK1400TS**
		AP3650		**AP4650**			75	**AP/AZ/AK1200S**
Halocarbon 114 ($C_2Cl_2F_4$)	30	**AP4540**	25	**AP4540**	7	**AP/AZ/AK1402TSA**	0.5	**AP/AZ/AK1101S**
		AP4650		**AP4650**			1	**AP/AZ/AK1000S**
							7	**AP/AZ/AK1402TSA**
Halocarbon 115 (C_2ClF_5)	60	**AP4540**	40	**AP4540**	3	**AP/AZ/AK1500S**	3	**AP/AZ/AK1000S**
		AP4650		**AP4650**	50	**AP/AZ/AK1400TS**	5	**AP/AZ/AK1000S HF**
					75	**AP/AZ/AK1200S**	50	**AP/AZ/AK1400TS**
							75	**AP/AZ/AK1200S**
Halocarbon 116 (C_2F_6)	60	**AP3000**	40	**AP3540**	3	**AP/AZ/AK1500S**	3	**AP/AZ/AK1000S**
		AP3650		**AP3650**	50	**AP/AZ/AK1400TS**	10	**AP/AZ/AK1000S HF**
	100	**AP3002**	80	**AP4540**	75	**AP/AZ/AK1200S**	25	**AP/AZ/AK1400TS**
		AP3650		**AP4650**	125	**AP/AZ/AK1200S HF**	50	**AP/AZ/AK1200S**
	275	**AP3113**	400	**AP3700**			90	**AP/AZ/AK1200S HF**
		AP3125		**AP3800**				**AZ/AK1300**
							175	**AP/AZ/AK1200S FC**
							450	**AP9100S**

■ denotes heating required to achieve stated flow.
Please read the forward 16 regarding how to read model number listed as recommendation.

If ① and ② are indicated in front of a model number, it means two stage regulation is required. The two regulators are in series with ① listed as the first stage and ② listed as the second stage.

Recommended Model Selection Table

Please read the forward 15 before selecting a product.

Process Gas \ Application	Valve				Regulator			
	Source applications		Distribution applications		Source applications		Distribution applications	
	Maximum flow (slpm)	Recommendation	Maximum flow (slpm)	Recommendation	Maximum flow (slpm)	Recommendation	Maximum flow (slpm)	Recommendation
Halocarbon 125 (C_2HF_5)	180	**AP4540**	70	**AP4540**	3	**AP/AZ/AK1500S**	3	**AP/AZ/AK1000S**
		AP4650		**AP4650**	25	**AP/AZ/AK1400TS**	5	**AP/AZ/AK1000S HF**
					75	**AP/AZ/AK1200S**	25	**AP/AZ/AK1400TS**
							75	**AP/AZ/AK1200S**
Halocarbon 134A ($C_2H_2F_4$)	55	**AP4540**	40	**AP4540**	3	**AP/AZ/AK1500S**	3	**AP/AZ/AK1000S**
		AP4650		**AP4650**	50	**AP/AZ/AK1400TS**	5	**AP/AZ/AK1000S HF**
		AP3100		**AP3800**	75	**AP/AZ/AK1200S**	50	**AP/AZ/AK1400TS**
	350	**AP3700**	230	**AP3700**			75	**AP/AZ/AK1200S**
		AP3800		**AP3800**				
Halocarbon R218 (C_3F_8)	35	**AP3540**	20	**AP3540**	3	**AP/AZ/AK1500S**	3	**AP/AZ/AK1000S**
		AP3650		**AP3650**	50	**AP/AZ/AK1400TS**	5	**AP/AZ/AK1000S HF**
	60	**AP4540**	40	**AP4540**	75	**AP/AZ/AK1200S**	50	**AP/AZ/AK1400TS**
		AP4650		**AP4650**			75	**AP/AZ/AK1200S**
Halocarbon C318 (C_4F_8)	25	**AP4540**	20	**AP4540**	6	**AP/AZ/AK1402TSA**	1	**AP/AZ/AK1101S**
		AP4650		**AP4650**			6	**AP/AZ/AK1402TSA**
Helium (He)	750	**AP3000**	250	**AP3540**	125	**AP/AZ/AK1500S**	65	**AP/AZ/AK1000S**
		AP3650		**AP3650**	500	**AP1900S**	125	**AP/AZ/AK1000S HF**
	1000	**AP3002**	450	**AP4540**	625	**AP1900S HF**	275	**AP/AZ/AK1400TS**
		AP3650		**AP4650**	2000	**AP/AZ/AK1200S HR**	625	**AP/AZ/AK1200S**
	2500	**AP3130**	2500	**AP3700**			900	**AP/AZ/AK1200S HF**
		AP3125		**AP3800**				**AZ/AK1300**
							1200	**AP/AZ/AK1200S FC**
							2500	**AP9100S**
Hydrogen (H_2)	800	**AP3000**	300	**AP3540**	125	**AP/AZ/AK1500S**	65	**AP/AZ/AK1000S**
		AP3650		**AP3650**	500	**AP1900S**	125	**AP/AZ/AK1000S HF**
	1600	**AP3002**	600	**AP4540**	625	**AP1900S HF**	275	**AP/AZ/AK1400TS**
		AP3650		**AP4650**	900	**AP2700S**	625	**AP/AZ/AK1200S**
	3000	**AP3130**	3000	**AP3700**	1200	**AP/AZ/AK1200S HR**	900	**AP/AZ/AK1200S HF**
		AP3125		**AP3800**				**AZ/AK1300S**
							1200	**AP/AZ/AK1200S FC**
							3000	**AP9100S**
Hydrogen Bromide (HBr)	155	**AP3000**	55	**AP3540**	1	**AP/AZ/AK1500SH**	1	**AP/AZ/AK1000SH**
		AP3650		**AP3650**	30	**AP/AZ/AK1400TS**	2	**AP/AZ/AK1000SH HF**
	190	**AP3002**	95	**AP4540**	50	**AP/AZ/AK1200SH**	30	**AP/AZ/AK1400TS**
		AP3650		**AP4650**			50	**AP/AZ/AK1200SH**
Hydrogen Chloride (HCl)	350	**AP3000**	75	**AP3540**	2	**AP/AZ/AK1500SH**	8	**AP/AZ/AK1000SH**
		AP3650		**AP3650**	90	**AP/AZ/AK1400TS**	20	**AP/AZ/AK1000SH HF**
	500	**AP3002**	150	**AP4540**	150	**AP/AZ/AK1200SH**	40	**AP/AZ/AK1400TS**
		AP3650		**AP4650**	600	**①AP1225SH**	85	**AP/AZ/AK1200SH**
	2000	**AP3113**	850	**AP3700**		**②AP1210SH HF**	160	**AP/AZ/AK1200SH HF**
		AP3125		**AP3800**	2000	**①AP9030S**		**AZ/AK1300S**
						②AP9110S	300	**AP/AZ/AK1200SH FC**
							800	**AP9100S**
Hydrogen Chloride Mixtures (Nitrogen Balance)	210	**AP3000**	105	**AP3540**	10	**AP/AZ/AK1500SH**	10	**AP/AZ/AK1000SH**
		AP3650		**AP3650**	20	**AP1900SH**	20	**AP/AZ/AK1000SH HF**
	265	**AP3002**	190	**AP4540**	40	**AP/AZ/AK1400TS**	40	**AP/AZ/AK1400TS**
		AP3650		**AP4650**				
Hydrogen Fluoride (HF)	20	**AP4540**	20	**AP4540**	5	**AP/AZ/AK1402TSA**	5	**AP/AZ/AK1402TSA**
		AP4650		**AP4650**				
Hydrogen Selenide (H_2Se)	125	**AP3540**	55	**AP3540**	5	**AP/AZ/AK1500S**	5	**AP/AZ/AK1000S**
		AP3650		**AP3650**	40	**AP/AZ/AK1400TS**	20	**AAP/AZ/AK1000S HF**
	215	**AP4540**	95	**AP4540**			40	**AP/AZ/AK1400TS**
		AP4650		**AP4650**				
Hydrogen Selenide Mixtures (Nitrogen Balance)	185	**AP3000**	90	**AP3540**	10	**AP/AZ/AK1500S**	10	**AP/AZ/AK1000S**
		AP3650		**AP3650**	20	**AP1900S**	20	**AP/AZ/AK1000S HF**
	225	**AP3002**	160	**AP4540**	50	**AP/AZ/AK1400TS**	50	**AP/AZ/AK1400TS**
		AP3650		**AP4650**				
Hydrogen Sulfide (H_2S)	210	**AP3000**	80	**AP3540**	5	**AP/AZ/AK1500S**	5	**AP/AZ/AK1000S**
		AP3650		**AP3650**	40	**AP/AZ/AK1400TS**	10	**AP/AZ/AK1000S HF**
	260	**AP3002**	140	**AP4540**			40	**AP/AZ/AK1400TS**
		AP3650		**AP4650**				

■ denotes heating required to achieve stated flow.
Please read the forward 16 regarding how to read model number listed as recommendation.

If ① and ② are indicated in front of a model number, it means two stage regulation is required. The two regulators are in series with ① listed as the first stage and ② listed as the second stage.

Recommended Model Selection Table

Please read the forward 15 before selecting a product.

Process Gas \ Application	Valve				Regulator			
	Source applications		Distribution applications		Source applications		Distribution applications	
	Maximum flow (slpm)	Recommendation	Maximum flow (slpm)	Recommendation	Maximum flow (slpm)	Recommendation	Maximum flow (slpm)	Recommendation
Krypton (Kr)	105	**AP3000**	50	**AP3540**	20	**AP/AZ/AK1500S**	20	**AP/AZ/AK1000S**
		AP3650		**AP3650**	60	**AP/AZ/AK1400TS**	30	**AP/AZ/AK1000S HF**
	130	**AP3002**	90	**AP4540**			60	**AP/AZ/AK1400TS**
		AP3650		**AP4650**				
Methane (CH_4)	245	**AP3000**	120	**AP3540**	10	**AP/AZ/AK1500S**	10	**AP/AZ/AK1000S**
		AP3650		**AP3650**	20	**AP1900S**	20	**AP/AZ/AK1000S HF**
	295	**AP3002**	210	**AP4540**	40	**AP/AZ/AK1400TS**	40	**AP/AZ/AK1400TS**
		AP3650		**AP4650**				
Methanol (CH_3OH)	40	**AP3540**	25	**AP3540**	3	**AP/AZ/AK1500S**	3	**AP/AZ/AK1000S**
		AP3650		**AP3650**	50	**AP/AZ/AK1400TS**	5	**AP/AZ/AK1000S HF**
	70	**AP4540**	40	**AP4540**				
		AP4650		**AP4650**				
Methyl Chloride (CH_3Cl)	60	**AP4540**	45	**AP4540**	1	**AP/AZ/AK1000S**	10	**AP/AZ/AK1402TSA**
		AP4650		**AP4650**	10	**AP/AZ/AK1402TSA**		
Methysilane (CH_3SiH_3)	200	**AP3540**	70	**AP3540**	3	**AP/AZ/AK1500S**	3	**AP/AZ/AK1000S**
		AP3650		**AP3650**	50	**AP/AZ/AK1400TS**	5	**AP/AZ/AK1000S HF**
	350	**AP4540**	120	**AP4540**	75	**AP/AZ/AK1200S**	50	**AP/AZ/AK1400TS**
		AP4650		**AP4650**			75	**AP/AZ/AK1200S**
Methyl Fluoride (CH_3F)	400	**AP3000**	120	**AP3540**	5	**AP/AZ/AK1500S**	5	**AP/AZ/AK1000S**
		AP3650		**AP3650**	50	**AP/AZ/AK1400TS**	10	**AP/AZ/AK1000S HF**
	490	**AP3002**	200	**AP4540**			50	**AP/AZ/AK1400TS**
		AP3650		**AP4650**				
Neon (Ne)	215	**AP3000**	110	**AP3540**	20	**AP/AZ/AK1500S**	20	**AP/AZ/AK1000S**
		AP3650		**AP3650**	40	**AP1900S**	40	**AP/AZ/AK1000S HF**
	260	**AP3002**	190	**AP4540**	300	**AP/AZ/AK1200S HF**	100	**AP/AZ/AK1400TS**
		AP3650		**AP4650**				
Nitrogen (N_2)	250	**AP3000**	100	**AP3540**	50	**AP/AZ/AK1500S**	25	**AP/AZ/AK1000S**
		AP3650		**AP3650**	200	**AP1900S**	50	**AP/AZ/AK1000S HF**
	400	**AP3002**	200	**AP4540**	250	**AP1900S HF**	150	**AP/AZ/AK1400TS**
		AP3650		**AP4650**	350	**AP2700**	250	**AP/AZ/AK1200S**
	1000	**AP3130**	1000	**AP3700**	1000	**AP/AZ/AK1200S HR**	300	**AP/AZ/AK1200S HF**
		AP3125		**AP3800**				**AZ/AK1300S**
							400	**AP/AZ/AK1200S FC**
							1000	**AP9100S**
Nitrogen Trifluoride (NF_3)	75	**AP3000**	60	**AP3540**	5	**AP/AZ/AK1500S**	6	**AP/AZ/AK1000S**
		AP3650		**AP3650**	60	**AP/AZ/AK1400TS**	15	**AP/AZ/AK1000S HF**
	100	**AP3002**	110	**AP4540**	150	**AP/AZ1400TS**	30	**AP/AZ/AK1400TS**
		AP3650		**AP4650**		**AP2700S**	75	**AP/AZ/AK1200S**
	350	**AP3130**	500	**AP3700**	400	**AP/AZ1200S HR**	125	**AP/AZ/AK1200 S HF**
		AP3125		**AP3800**	1000	**①AP9030**		**AZ/AK1300S**
						②AP9110	250	**AP/AZ/AK1200S FC**
							600	**AP9100S**
Nitric Oxide (NO)	310	**AP3000**	75	**AP3540**	3	**AP/AZ/AK1500S**	3	**AP/AZ/AK1000S**
		AP3650		**AP3650**	50	**AP/AZ/AK1400TS**	6	**AP/AZ/AK1000S HF**
	380	**AP3002**	125	**AP4540**	75	**AP/AZ/AK1200S**	50	**AP/AZ/AK1400TS**
		AP3650		**AP4650**			75	**AP/AZ/AK1200S**
Nitrous Oxide (N_2O)	300	**AP3000**	70	**AP3540**	3	**AP/AZ/AK1500S VS**	8	**AP/AZ/AK1000S VS**
		AP3650		**AP3650**	60	**AP/AZ/AK1400TS VS**	20	**AP/AZ/AK1000S VS HF**
	500	**AP3002**	140	**AP4540**	100	**AP/AZ/AK1200S VS**	35	**AP/AZ/AK1400TS VS**
		AP3650		**AP4650**	150	**AP/AZ1200S VS HF**	85	**AP/AZ/AK1200S VS**
	1500	**AP3113**	750	**AP3700**	500	**①AP/AZ1225S VS**	160	**AP/AZ/AK1200S VS HF**
		AP3125		**AP3800**		**②AP/AZ1200S VS HF**		**AZ/AK1300S**
					1000	**①AP9030S VS**	320	**AP/AZ/AK1200S VS FC**
						②AP9100S VS	800	**AP9100S VS**
Octafluorocyclopentene (C_5F_8)	15	**AP4540**	15	**AP4540**	5	**AP/AZ/AK1402TSA**	0.3	**AP/AZ1101S**
		AP4650		**AP4650**			5	**AP/AZ/AK1402TSA**
Oxygen (O_2)	250	**AP3000**	75	**AP3540**	10	**AP/AZ/AK1500S**	10	**AP/AZ/AK1000S**
		AP3650		**AP3650**	80	**AP1900S**	25	**AP/AZ/AK1000S HF**
	400	**AP3002**	150	**AP4540**	150	**AP1900S HF**	50	**AP/AZ/AK1400TS**
		AP3650		**AP4650**	1000	**AP/AZ/AK1200S HR**	120	**AP/AZ/AK1200S**
			1000	**AP3700**			200	**AP/AZ/AK1200S HF**
				AP3800				**AZ/AK1300S**
							400	**AP/AZ/AK1200S FC**
							1000	**AP9100S**

■ denotes heating required to achieve stated flow.
Please read the forward 16 regarding how to read model number listed as recommendation.

If ① and ② are indicated in front of a model number, it means two stage regulation is required. The two regulators are in series with ① listed as the first stage and ② listed as the second stage.

Recommended Model Selection Table

Please read the forward 15 before selecting a product.

Process Gas \ Application	Valve				Regulator			
	Source applications		Distribution applications		Source applications		Distribution applications	
	Maximum flow (slpm)	Recommendation	Maximum flow (slpm)	Recommendation	Maximum flow (slpm)	Recommendation	Maximum flow (slpm)	Recommendation
Perfluorobutadiene (C_4F_6)	25	**AP4540**	25	**AP4540**	5	**AP/AZ/AK1402TSA**	0.5	**AP/AZ1101S**
		AP4650		**AP4650**			5	**AP/AZ/AK1402TSA**
Phosphine (PH_3)	320	**AP3000**	80	**AP3540**	5	**AP/AZ/AK1500S**	5	**AP/AZ/AK1000S**
		AP3650		**AP3650**	40	**AP/AZ/AK1400TS**	10	**AP/AZ/AK1000S HF**
	390	**AP3002**	145	**AP4540**				
		AP3650		**AP4650**				
Phosphine Mixtures (Nitrogen Balance)	185	**AP3000**	90	**AP3540**	10	**AP/AZ/AK1500S**	10	**AP/AZ/AK1000S**
		AP3650		**AP3650**	20	**AP1900S**	20	**AP/AZ/AK1000S HF**
	225	**AP3002**	160	**AP4540**				
		AP3650		**AP4650**				
Phosphorous Pentafluoride (PF_5)	15	**AP3000**	5	**AP3540**	10	**AP/AZ/AK1500S**	10	**AP/AZ/AK1000S**
		AP3650		**AP3650**	20	**AP1900S**	20	**AP/AZ/AK1000S HF**
	19	**AP3002**	9	**AP4540**				
		AP3650		**AP4650**				
	41	**AP3130**	52	**AP3700**				
		AP3125		**AP3800**				
Propane (C_3H_8)	65	**AP3540**	42	**AP3540**	3	**AP/AZ/AK1500S**	3	**AP/AZ/AK1000S**
		AP3650		**AP3650**	50	**AP/AZ/AK1400TS**	5	**AP/AZ/AK1000S HF**
	115	**AP4450**	75	**AP4540**	75	**AP/AZ/AK1200S**	50	**AP/AZ/AK1400TS**
		AP4650		**AP4650**				
Propene (C_3H_6)	185	**AP3540**	75	**AP3540**	3	**AP/AZ/AK1500S**	3	**AP/AZ/AK1000S**
		AP3650		**AP3650**	50	**AP/AZ/AK1400TS**	5	**AP/AZ/AK1000S HF**
	320	**AP4540**	125	**AP4540**			50	**AP/AZ/AK1400TS**
		AP4650		**AP4650**				
Silane (SiH_4)	150	**AP3000**	75	**AP3540**	5	**AP/AZ/AK1500S**	10	**AP/AZ/AK1000S**
		AP3650		**AP3650**	40	**AP/AZ/AK1400TS**	25	**AP/AZ/AK1000S HF**
	250	**AP3002**	150	**AP4540**	50	**AP2700S**	50	**AP/AZ/AK1400TS**
		AP3650		**AP4650**	60	**AP/AZ/AK1200S**	120	**AP/AZ/AK1200S**
	600	**AP3130**	750	**AP3700**	100	**AP/AZ/AK1200S HF**	200	**AP/AZ/AK1200S HF**
		AP3125		**AP3800**	500	**①AP/AZ1225S**		**AZ/AK1300S**
						②AP/AZ1200S HF	400	**AP/AZ/AK1200S FC**
							1000	**AP9100S**
Silane Mixtures (Nitrogen Balance)	185	**AP3000**	90	**AP3540**	10	**AP/AZ/AK1500S**	10	**AP/AZ/AK1000S**
		AP3650		**AP3650**	20	**AP1900S**	20	**AP/AZ/AK1000S HF**
	225	**AP3002**	160	**AP4540**	40	**AP/AZ/AK1400TS**	40	**AP/AZ/AK1400TS**
		AP3650		**AP4650**				
Silicon Tetrachloride ($SiCl_4$)	10	**AP4540**	10	**AP4540**	5	**AP/AZ/AK1402TSA**	0.5	**AP/AZ/AK1101S**
		AP4650		**AP4650**			5	**AP/AZ/AK1402TSA**
Silicon Tetrafluoride (SiF_4)	95	**AP3000**	45	**AP3540**	10	**AP/AZ/AK1500S**	10	**AP/AZ/AK1000S**
		AP3650		**AP3650**	40	**AP/AZ/AK1400TS**	20	**AP/AZ/AK1000S HF**
	115	**AP3002**	80	**AP4540**			40	**AP/AZ/AK1400TS**
		AP3650		**AP4650**				
Sulfur Dioxide (SO_2)	80	**AP4540**	30	**AP4540**	1	**AP/AZ/AK1000S**	6	**AP/AZ/AK1402TSA**
		AP4650		**AP4650**	6	**AP/AZ/AK1402TSA**		
Sulfur Hexafluoride (SF_6)							5	**AP/AZ/AK1000S**
	125	**AP3000**	35	**AP3540**	3	**AP/AZ/AK1500S**	12	**AP/AZ/AK1000S HF**
		AP3650		**AP3650**	40	**AP/AZ/AK1400TS**	25	**AP/AZ/AK1400TS**
	200	**AP3000**	75	**AP4540**	60	**AP/AZ/AK1200S**	60	**AP/AZ/AK1200S**
		AP3650		**AP4650**	150	**AP/AZ/AK1200S HF**	90	**AP/AZ/AK1200S HF**
	500	**AP3113**	400	**AP3700**	500	**AP9100S**		**AZ/AK1300S**
		AP3125		**AP3800**			180	**AP/AZ/AK1200S FC**
							400	**AP9100S**
Sulfur Tetrafluoride (SF_4)	200	**AP4540**	80	**AP4540**	3	**AP/AZ/AK1500S**	3	**AP/AZ/AK1000S**
		AP4650		**AP4650**	15	**AP/AZ/AK1400TS**	5	**AP/AZ/AK1000S HF**
							15	**AP/AZ/AK1400TS**
Trichlorosilane ($SiHCl_3$)	35	**AP4540**	30	**AP4540**	10	**AP/AZ/AK1402TSA**	0.5	**AP/AZ/AK1101S**
		AP4650		**AP4650**			10	**AP/AZ/AK1402TSA**
Trimethylsilane ($(CH_3)_3SiH$)	30	**AP4540**	25	**AP4540**	7	**AP/AZ/AK1402TSA**	0.5	**AP/AZ1101S**
		AP4650		**AP4650**			7	**AP/AZ/AK1402TSA**
Tungsten Hexafluoride (WF_6)	10	**AP4540**	10	**AP4540**	5	**AP/AZ/AK1402TSA**	0.3	**AP/AZ/AK1101SH**
		AP4650		**AP4650**			5	**AP/AZ/AK1402TSA**
Xenon (Xe)	85	**AP3000**	40	**AP3540**	5	**AP/AZ/AK1500S**	5	**AP/AZ/AK1000S**
		AP3650		**AP3650**	25	**AP/AZ/AK1400TS**	10	**AP/AZ/AK1000S HF**
	100	**AP3002**	70	**AP4540**			25	**AP/AZ/AK1400TS**
		AP3650		**AP4650**				

■ denotes heating required to achieve stated flow.
Please read the forward 16 regarding how to read model number listed as recommendation.

If ① and ② are indicated in front of a model number, it means two stage regulation is required. The two regulators are in series with ① listed as the first stage and ② listed as the second stage.

Regulators

Single Stage Compact Regulator for Ultra High Purity

Series AP500

- **For UHP gas delivery**
- **Flow capacity Standard: to 15 slpm**
  HF (option): to 30 slpm
- **Body material: 316L SS secondary remelt**
- **Hastelloy internals available for corrosion resistance**
- **Sub-atmospheric pressure delivery option**

How to Order

AP5 02 S □ □ 2PW FV4 FV4 □ □ □ □

Port Number: ① ② ③

Delivery pressure

Code	Delivery pressure
01	0.5 to 10 psig (0.0034 to 0.07 MPa)
	Sub-atmospheric (A): 100 mm Hg absolute to 10 psig (-88 kPa to 0.07 MPa)
02	0.5 to 30 psig (0.0034 to 0.2 MPa)
06	1 to 60 psig (0.007 to 0.4 MPa)
10	1 to 100 psig (0.007 to 0.7 MPa)

Material

Code	Body	Poppet	Diaphragm	Nozzle
S	316L SS secondary remelt	316L SS	Elgiloy®	316L SS
SH		Hastelloy® C-22		

Surface finish

Code	Surface finish Ra max
No code	15 µin. (0.4 µm) Standard
M	10 µin. (0.25 µm)
V	7 µin. (0.18 µm)
X	5 µin. (0.13 µm)

Ports

Code	Ports
2PW	2 ports
3PWG	3 ports

Range options *1)

Code	Specification
No code	Standard
A	Sub-atmospheric

*1) Only available with AP501.

Pressure gauge unit *3)

Code	Unit
No code	psig/bar
MPA	MPa

*3) Pressure gauge unit MPa or psig/bar selectable. However under Japanese regulation, only MPa is available in Japan.

Option

Code	Specification	Cv
No code	Standard	0.06
FI	Friction dampener *6)	
HF	High flow *7)	0.1

*6) FI is friction dampener to slow response and reduce interaction with MFC.
*7) VS material not available with HF option.

Seat material

Code	Material
No code	PCTFE (Standard)
TF	PTFE *4)
VS	Vespel® *5)

*4) PTFE recommended for applications such as within a process tool.
*5) Not available with SH material.

Porting Configuration (Top view)

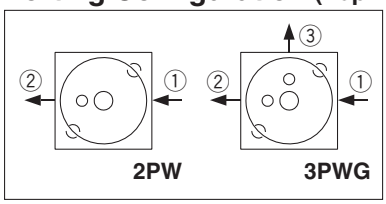

①IN ②OUT ③Gauge port (Outlet)

Connections (Inlet①, Outlet②)

Code	Connections
FV4	1/4 inch face seal (Female)
MV4	1/4 inch face seal (Male)
TW4	1/4 inch tube weld

Gauge port (Outlet③)

Code	Connections or Pressure gauge *2)		
		psig/bar unit	MPa unit
No code	No gauge port		
MV4	No pressure gauge	1/4 inch face seal (Male)	
FV4		1/4 inch face seal (Female)	
TW4		1/4 inch tube weld	
V3	With pressure gauge	-30in.Hg to 30psig	-0.1 to 0.2 MPa
L		-30in.Hg to 60psig	-0.1 to 0.4 MPa
1		-30in.Hg to 100psig	-0.1 to 0.7 MPa

*2) Refer to gauge guide (P.94) for gauge specifications.

Specifications

Operating Parameters		AP501□□A	AP501	AP502	AP506	AP510
Delivery pressure		100 mm Hg absolute to 10 psig (-88 kPa to 0.07 MPa)	0.5 to 10 psig (0.0034 to 0.07 MPa)	0.5 to 30 psig (0.0034 to 0.2 MPa)	1 to 60 psig (0.007 to 0.4 MPa)	1 to 100 psig (0.007 to 0.7 MPa)
Gas		Select compatible materials of construction for the gas				
Source pressure		Vacuum to 150 psig (1.0 MPa)				
Proof pressure (Inlet)		500 psig (3.4 MPa)				
Burst pressure		1000 psig (6.9 MPa)				
Ambient and operating temperature		-40 to 71 °C (No freezing) *1)				
Cv		0.06				
Leak rate	Inboard leakage	2×10^{-11} Pa·m³/sec				
	Outboard leakage	2×10^{-10} Pa·m³/sec *2)				
Across the seat leak		4×10^{-9} Pa·m³/sec *2)				
Surface finish		Ra max 15 µin. (0.4 µm) Option: 10 µin. (0.25 µm), 7 µin. (0.18 µm), 5 µin. (0.13 µm)				
Connections		Face seal, Tube weld				
Supply pressure effect		0.2 psig (0.0014 MPa) rise in delivery pressure per 20 psig (0.14 MPa) source pressure drop				
Installation		Bottom mount				
Internal volume		0.15 in³ (2.4 cm³)				
Mass		0.45 kg *3)				

*1) -10 to 90 °C for Vespel® seat.
*2) Tested with Helium gas inlet pressure 100 psig (0.7 MPa).
*3) Mass, including individual boxed weight, may vary depending on connections or options.

Option

High flow

Higher flow capacity with internal changes only, no change in external dimensions. Changes from the standard type are:

Option	Other Parameters	AP501□□A	AP501	AP502	AP506	AP510
HF	Cv	0.1				
	Supply pressure effect	0.4 psig (0.0028 MPa) rise in delivery pressure per 20 psig (0.14 MPa) source pressure drop				

Wetted Parts Material

Wetted Parts	S	SH
Body	316L SS secondary remelt	
Surface finish	Electropolish + Passivation	
Poppet	316L SS	Hastelloy® C-22
Diaphragm	Elgiloy®	
Nozzle	316L SS	
Seat	PTFE (Option: PCTFE, Vespel®)	PTFE (Option: PCTFE)

Dimensions

inch (mm)

AP500

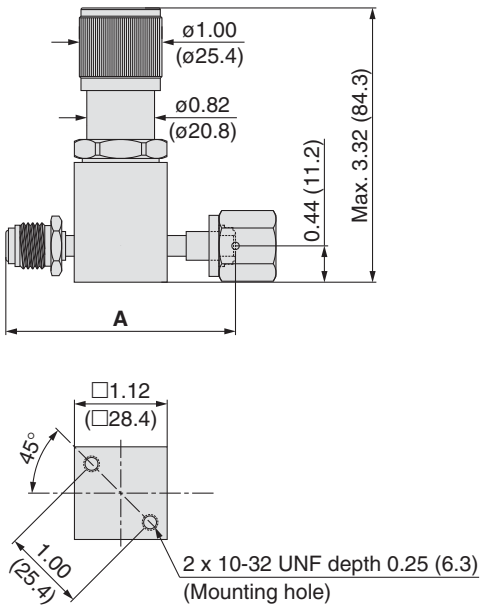

Connections	A	
	inch	(mm)
FV4	2.78	(70.6)
MV4		
TW4	2.12	(53.8)

Flow Characteristics

AP500

Inlet pressure: ---- 100 psig (0.69 MPa) —— 30 psig (0.21 MPa)

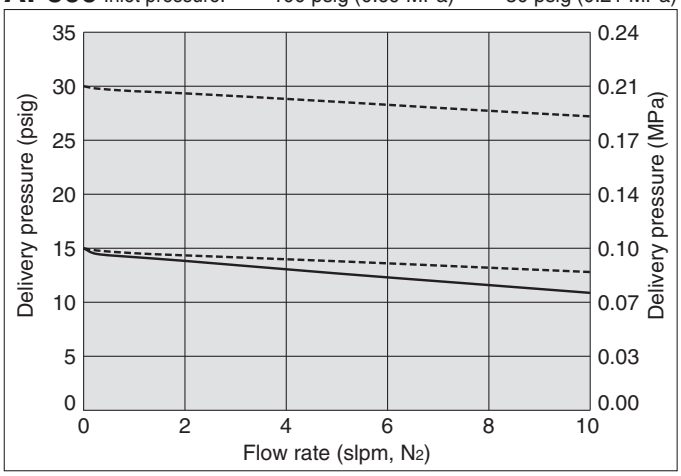

AP500HF

Inlet pressure: --- 75 psig (0.52 MPa) ---- 45 psig (0.31 MPa) —— 30 psig (0.21 MPa)

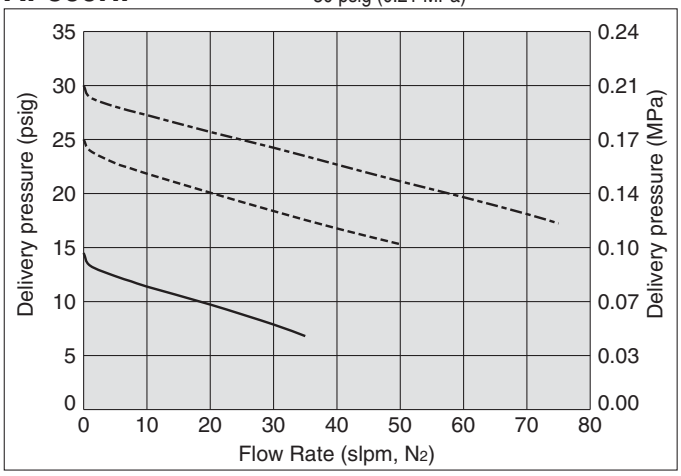

AP501A

Input pressure : 2 psig (14 kPa)

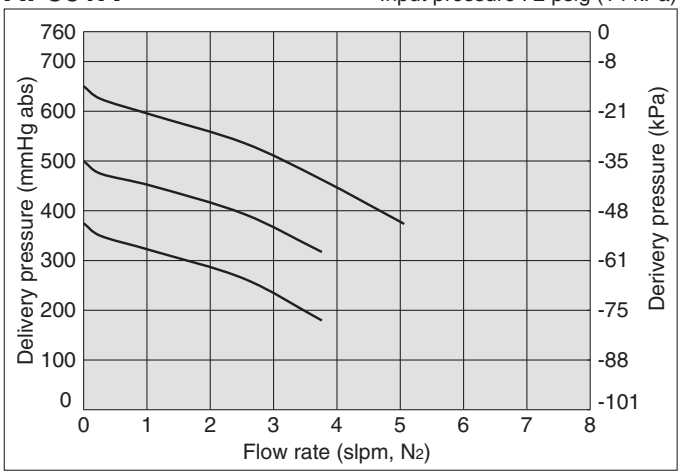

Hastelloy® is a registered trademark of Haynes International. Elgiloy® is a registered trademark of Elgiloy Specialty Metals.
Vespel® is a registered trademark of DuPont.

Single Stage Regulator for Ultra High Purity

Low to intermediate flow

Series AP1000

- **For UHP gas delivery**
- **High inlet pressure type: Max. 3500 psig (24.1 MPa)**
- **Flow capacity Standard: to 30 slpm**
  HF (option): to 120 slpm
- **Body material: 316L SS secondary remelt**
- **Hastelloy internals available for corrosion resistance**

How to Order

Port Number ① ② ③ ④

AP10 01 S □ 2PW FV4 FV4 □ □ □ □ □ □

Delivery pressure

Code	Delivery pressure
01	1 to 10 psig (0.007 to 0.07 MPa)
02	1 to 30 psig (0.007 to 0.2 MPa)
06	2 to 60 psig (0.014 to 0.4 MPa)
10	2 to 100 psig (0.014 to 0.7 MPa)
15	5 to 150 psig (0.034 to 1.0 MPa)

Material

Code	Body	Poppet	Diaphragm	Nozzle
S	316L SS secondary remelt	316L SS	316L SS	316L SS
SHP		Hastelloy® C-22	Hastelloy® C-22	
SH				
H	Hastelloy® C-22			Hastelloy® C-22

Surface finish

Code	Surface finish Ra max
No code	15 µin. (0.4 µm) Standard
M	10 µin. (0.25 µm)
V	7 µin. (0.18 µm)
X	5 µin. (0.13 µm)

Ports

Code	Ports
2PW	2 ports
3PW	3 ports
4PW	4 ports

Porting Configuration

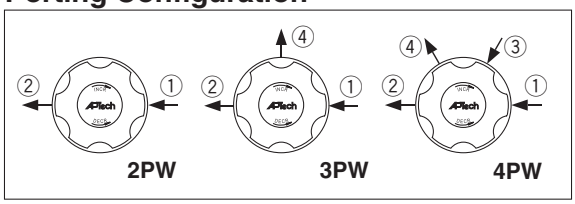

①IN ②OUT ③Gauge port (Inlet) ④Gauge port (Outlet)

Connections (Inlet①, Outlet②)

Code	Connections
FV4	1/4 inch face seal (Female)
MV4	1/4 inch face seal (Male)
TW4	1/4 inch tube weld
FV6	3/8 inch face seal (Female)
MV6	3/8 inch face seal (Male)
TW6	3/8 inch tube weld

Gauge port (Inlet③, Outlet④)

Code	Pressure gauge *1)	
	psig/bar unit	MPa unit
No code	No gauge port	
0	No pressure gauge (Connections: 1/4 inch face seal male)	
V3	-30 in.Hg to 30 psig	-0.1 to 0.2 MPa
L	-30 in.Hg to 60 psig	-0.1 to 0.4 MPa
1	-30 in.Hg to 100 psig	-0.1 to 0.7 MPa
H	-30 in.Hg to 160 psig	-0.1 to 1.1 MPa
2	0 to 200 psig	0 to 1.4 MPa
4	0 to 400 psig	0 to 3 MPa
10	0 to 1000 psig	0 to 7 MPa
40	0 to 4000 psig	0 to 28 MPa

*1) Refer to gauge guide (P.94) for gauge specifications.

Sample Order Number

	Port ①	②	③	④		
AP1001S	2PW	FV4	FV4			
	3PW	FV4	FV4		0	
	3PW	FV4	FV4		V3	MPA
	4PW	FV4	FV4	1	V3	MPA

Bonnet option

Code	Bonnet
No code	Standard
P	Panel installation *6)

*6) Panel mounting hole: dia 1.56inch (39.6 mm).

Option

Code	Specification
No code	Standard (Cv: 0.09)
HF	High flow (Cv: 0.15)

Seat material

Code	Material
No code	PCTFE (Standard)
VS	Vespel® *3)
TF	PTFE *4) *5)

*3) Not available with SHP, SH, H materials.
*4) PTFE recommended for applications such as within a process tool.
*5) Source pressure rating is limited to 300 psig (2.1 MPa) or less.

Pressure gauge unit *2)

Code	Unit
No code	psig/bar
MPA	MPa

*2) Pressure gauge unit MPa or psig/bar selectable. However under Japanese regulation, only MPa is available in Japan.

Specifications

Operating Parameters		AP1001	AP1002	AP1006	AP1010	AP1015
Delivery pressure		1 to 10 psig (0.007 to 0.07 MPa)	1 to 30 psig (0.007 to 0.2 MPa)	2 to 60 psig (0.014 to 0.4 MPa)	2 to 100 psig (0.014 to 0.7 MPa)	5 to 150 psig (0.034 to 1.0 MPa)
Gas		Select compatible materials of construction for the gas				
Source pressure		Vacuum to 300 psig (2.1MPa)	Vacuum to 3500 psig (24.1 MPa) *1)			
Proof pressure (Inlet)		5000 psig (34.5 MPa)				
Burst pressure		10000 psig (69 MPa)				
Ambient and operating temperature		-40 to 71 °C (No freezing) *2)				
Cv		0.09				
Leak rate	**Inboard leakage**	2×10^{-11} Pa·m³/sec				
	Outboard leakage	2×10^{-10} Pa·m³/sec *3)				
Across the seat leak		4×10^{-9} Pa·m³/sec *4)				
Surface finish		Ra max 15 µin. (0.4 µm) Option: 10 µin. (0.25 µm), 7 µin. (0.18 µm), 5 µin. (0.13 µm)				
Connections		Face seal, Tube weld				
Bonnet port		NPT 1/8 inch *5)				
Supply pressure effect		0.38 psig (0.0026 MPa) rise in delivery pressure per 100 psig (0.7 MPa) source pressure drop				
Installation		Bottom mount (Option: panel mount)				
Internal volume		0.49 in³ (8 cm³)				
Mass		1.25 kg *6)				

*1) Max 300 psig (2.1 MPa) for PTFE seat.
*2) -10 to 90°C for Vespel® seat.
*3) Tested with Helium gas inlet pressure 1500 psig (10.5 MPa).
*4) Tested with Helium gas inlet pressure 1000 psig (7 MPa).
*5) On panel mount option, bonnet port is not threaded.
*6) Mass, including individual boxed weight, may vary depending on connections or options.

Option

High flow

Higher flow capacity with internal changes only, no change in external dimensions. Changes from the standard type are:

Option	Other Parameters	AP1001	AP1002	AP1006	AP1010	AP1015
HF	Cv	0.15				
	Supply pressure effect	0.75 psig (0.0052 MPa) rise in delivery pressure per 100 psig (0.7 MPa) source pressure drop				

Wetted Parts Material

Wetted Parts	S	SHP	SH	H
Body	316L SS secondary remelt			Hastelloy® C-22
Surface finish	Electropolish + Passivation			Electropolish
Poppet	316L SS	Hastelloy® C-22		
Diaphragm	316L SS	Hastelloy® C-22		
Nozzle	316L SS		Hastelloy® C-22	
Seat	PCTFE (Option: Vespel®, PTFE)	PCTFE (Option: PTFE)		

Dimensions

inch (mm)

AP1000

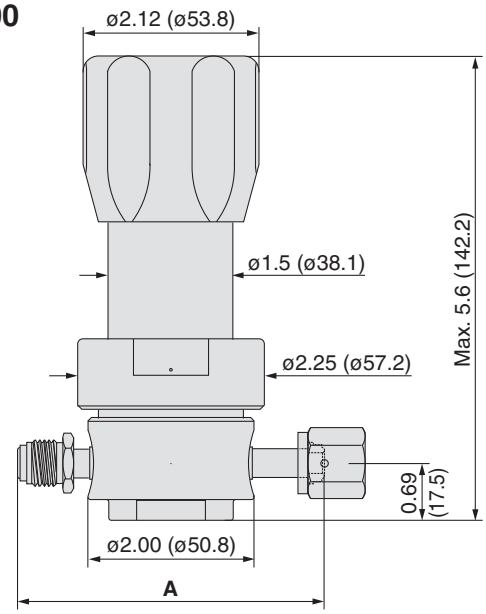

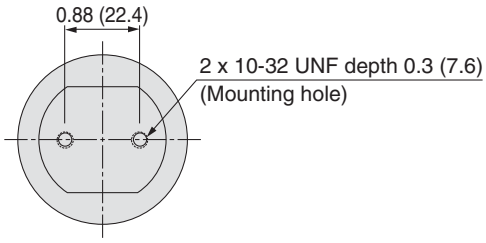

Connections	A	
	inch	(mm)
FV4	3.70	(94.0)
MV4		
TW4	2.96	(75.2)
FV6	4.70	(119.4)
MV6		
TW6	2.96	(75.2)

Flow Characteristics

AP1000

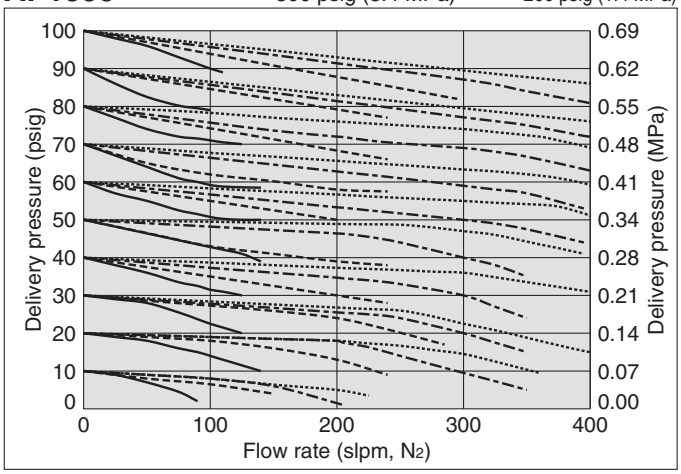

AP1000

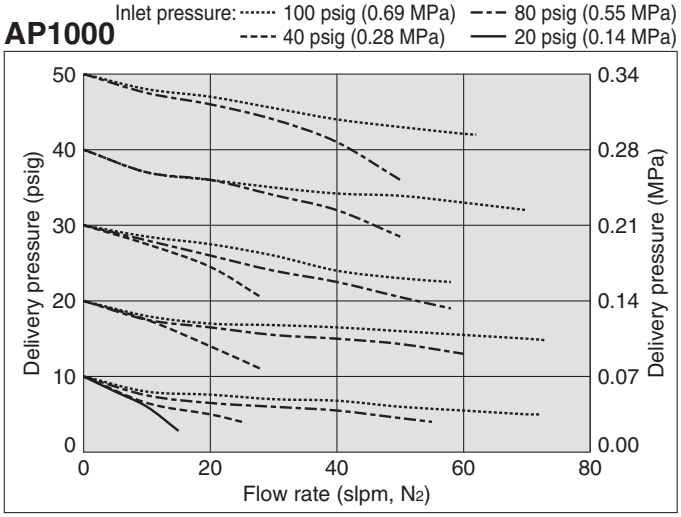

AP1000HF

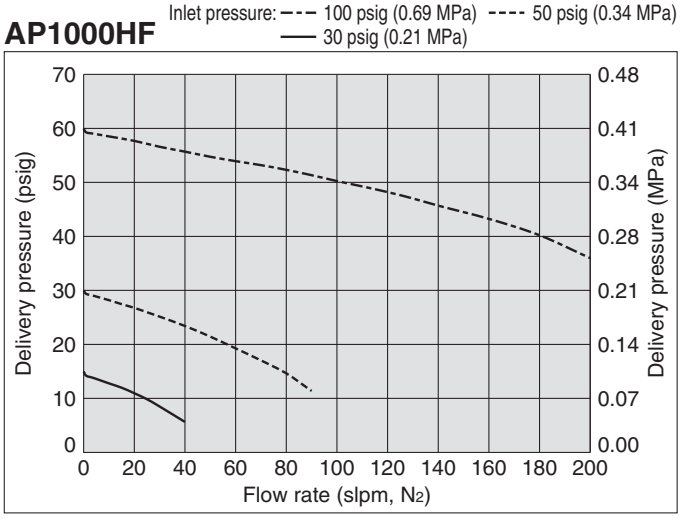

Hastelloy® is a registered trademark of Haynes International.
Vespel® is a registered trademark of DuPont.

Single Stage Regulator for Ultra High Purity | Low flow (Tied-diaphragm)

Series AP1500

- **For UHP gas delivery**
- **High inlet pressure type: Max. 3500 psig (24.1 MPa)**
- **Flow capacity : to 30 slpm**
- **Body material: 316L SS secondary remelt**
- **Hastelloy internals available for corrosion resistance**
- **Tied-diaphragm design**

How to Order

AP15 02 S 2PW FV4 FV4

Port Number: ① FV4, ② FV4, ③, ④

Delivery pressure

Code	Delivery pressure
02	1 to 30 psig (0.007 to 0.2 MPa)
06	2 to 60 psig (0.014 to 0.4 MPa)
10	2 to 100 psig (0.014 to 0.7 MPa)
15	5 to 150 psig (0.034 to 1.0 MPa)

Material

Code	Body	Poppet	Diaphragm	Nozzle
S	316L SS secondary remelt	316L SS	316L SS	316L SS
SHP		Hastelloy® C-22	Hastelloy® C-22	
SH				Hastelloy® C-22
H	Hastelloy® C-22			

Surface finish

Code	Surface finish Ra max
No code	15 µin. (0.4 µm) Standard
M	10 µin. (0.25 µm)
V	7 µin. (0.18 µm)
X	5 µin. (0.13 µm)

Ports

Code	Ports
2PW	2 port
3PW	3 port
4PW	4 port

Connections (Inlet①, Outlet②)

Code	Connections
FV4	1/4 inch face seal (Female)
MV4	1/4 inch face seal (Male)
TW4	1/4 inch tube weld
FV6	3/8 inch face seal (Female)
MV6	3/8 inch face seal (Male)
TW6	3/8 inch tube weld

Gauge port (Inlet③, Outlet④)

Code	Pressure gauge *1) psig/bar unit	Pressure gauge *1) MPa unit
No code	No gauge port	
0	No pressure gauge (Connections: 1/4 inch face seal male)	
V3	-30 in.Hg to 30 psig	-0.1 to 0.2 MPa
L	-30 in.Hg to 60 psig	-0.1 to 0.4 MPa
1	-30 in.Hg to 100 psig	-0.1 to 0.7 MPa
H	-30 in.Hg to 160 psig	-0.1 to 1.1 MPa
2	0 to 200 psig	0 to 1.4 MPa
4	0 to 400 psig	0 to 3 MPa
10	0 to 1000 psig	0 to 7 MPa
40	0 to 4000 psig	0 to 28 MPa

*1) Refer to gauge guide (P.94) for gauge specifications.

Bonnet option

Code	Bonnet
No code	Standard
P	Panel installation *4)

*4) Panel mounting hole: dia. 1.56 inch (39.6 mm).

Seat material

Code	Material
No code	PCTFE (Standard)
VS	Vespel® *3)

*3) Not available with SHP, SH, H materials.

Pressure gauge unit *2)

Code	Unit
No code	psig/bar
MPA	MPa

*2) Pressure gauge unit MPa or psig/bar selectable. However under Japanese regulation, only MPa is available in Japan.

Porting Configuration

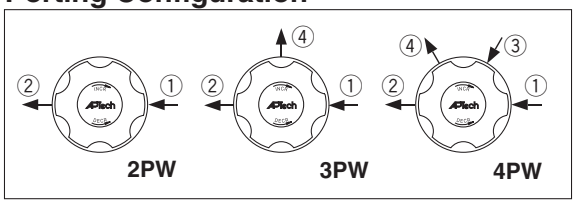

①IN ②OUT ③Gauge port (Inlet) ④Gauge port (Outlet)

Sample Order Number

	Port ①	②	③	④		
AP1510S	2PW	FV4	FV4			
	3PW	FV4	FV4		0	
	3PW	FV4	FV4		1	MPA
	4PW	FV4	FV4	40	1	MPA

Specifications

Operating Parameters		AP1502	AP1506	AP1510	AP1515
Delivery pressure		1 to 30 psig (0.007 to 0.2 MPa)	2 to 60 psig (0.014 to 0.4 MPa)	2 to 100 psig (0.014 to 0.7 MPa)	5 to 150 psig (0.034 to 1.0 MPa)
Gas		Select compatible materials of construction for the gas			
Source pressure		Vacuum to 3500 psig (24.1 MPa)			
Proof pressure (Inlet)		5000 psig (34.5 MPa)			
Burst pressure		10000 psig (69MPa)			
Ambient and operating temperature		-40 to 71 °C (No freezing) *1)			
Cv		0.09			
Leak rate	**Inboard leakage**	2×10^{-11} Pa·m³/sec			
	Outboard leakage	2×10^{-10} Pa·m³/sec *2)			
Across the seat leak		4×10^{-9} Pa·m³/sec *3)			
Surface finish		Ra max 15 µin. (0.4 µm) Option: 10 µin. (0.25 µm), 7 µin. (0.18 µm), 5 µin. (0.13 µm)			
Connections		Face seal, Tube weld			
Bonnet port		NPT 1/8 inch *4)			
Supply pressure effect		0.41 psig (0.0028 MPa) rise in delivery pressure per 100 psig (0.7 MPa) source pressure drop			
Installation		Bottom mount (Option: panel mount)			
Internal volume		0.51 in³ (8.4 cm³)			
Mass		1.27 kg *5)			

*1) -10 to 90 °C for Vespel® seat.
*2) Tested with Helium gas inlet pressure 1500 psig (10.5 MPa).
*3) Tested with Helium gas inlet pressure 1000 psig (7 MPa).
*4) On panel mount option, bonnet port is not threaded.
*5) Mass, including individual boxed weight, may vary depending on connections or options.

Wetted Parts Material

Wetted Parts	S	SHP	SH	H
Body	316L SS secondary remelt			Hastelloy® C-22
Surface finish	Electropolish + Passivation			Electropolish
Poppet	316L SS	Hastelloy® C-22		
Diaphragm	316L SS	Hastelloy® C-22		
Nozzle	316L SS		Hastelloy® C-22	
Seat	PCTFE (Option: Vespel®)	PCTFE		

Dimensions

inch (mm)

AP1500

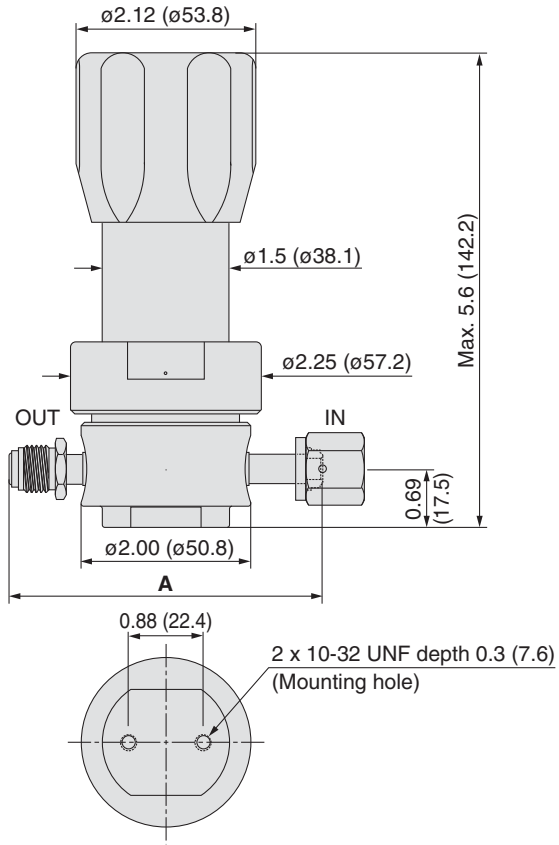

Connections	A	
	inch	(mm)
FV4	3.70	(94.0)
MV4		
TW4	2.96	(75.2)
FV6	4.70	(119.4)
MV6		
TW6	2.96	(75.2)

Flow Characteristics

AP1500

Inlet pressure: 2000 to 3000 psig (13.8 to 20.7 MPa), 1000 psig (6.9 MPa), 500 psig (3.4 MPa), 200 psig (1.4 MPa)

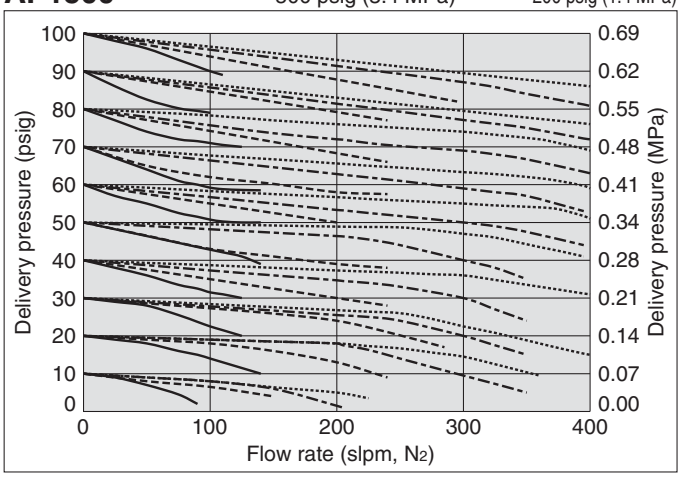

AP1500

Inlet pressure: 100 psig (0.69 MPa), 80 psig (0.55 MPa), 40 psig (0.28 MPa), 20 psig (0.14 MPa)

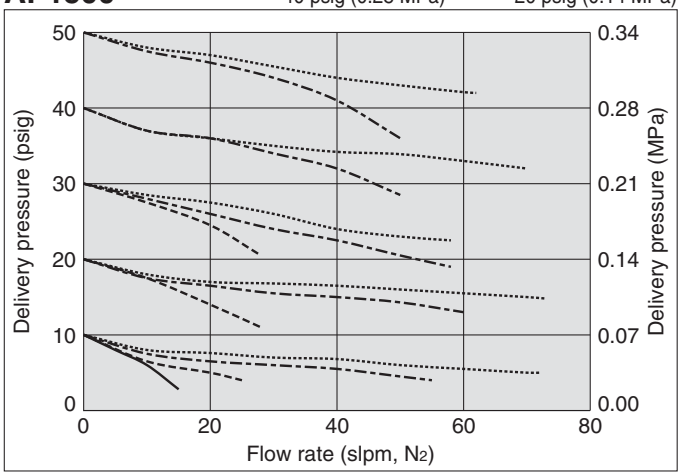

Hastelloy® is a registered trademark of Haynes International.
Vespel® is a registered trademark of DuPont.

Single Stage Regulator for Ultra High Purity

Low to intermediate flow

Series AP1600

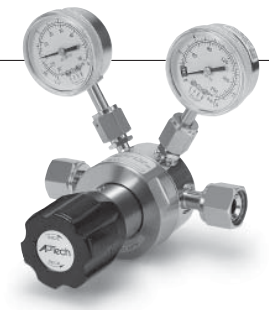

- **For UHP gas delivery**
- **High inlet pressure type: Max. 3500 psig (24.1 MPa)**
- **Flow capacity: to 100 slpm**
- **Body material: 316L SS secondary remelt**
- **Hastelloy internals available for corrosion resistance**

How to Order

AP16 01 S 2PW FV4 FV4

Port Number: ① ② ③ ④

Delivery pressure

Code	Delivery pressure
01	1 to 10 psig (0.007 to 0.07 MPa)
02	1 to 30 psig (0.007 to 0.2 MPa)
06	2 to 60 psig (0.014 to 0.4 MPa)
10	2 to 100 psig (0.014 to 0.7 MPa)

Material

Code	Body	Poppet	Diaphragm	Nozzle
S	316L SS secondary remelt	316L SS	316L SS	316L SS
SH		Hastelloy® C-22	Hastelloy® C-22	Hastelloy® C-22

Surface finish

Code	Surface finish Ra max
No code	15 µin. (0.4 µm) Standard
M	10 µin. (0.25 µm)
V	7 µin. (0.18 µm)
X	5 µin. (0.13 µm)

Ports

Code	Ports
2PW	2 ports
3PW	3 ports
4PW	4 ports

Connections (Inlet①, Outlet②)

Code	Connections
FV4	1/4 inch face seal (Female)
MV4	1/4 inch face seal (Male)
TW4	1/4 inch tube weld
FV6	3/8 inch face seal (Female)
MV6	3/8 inch face seal (Male)
TW6	3/8 inch tube weld

Gauge port (Inlet③, Outlet④)

Code	Pressure gauge *1)	
	psig/bar unit	MPa unit
No code	No gauge port	
0	No pressure gauge (Connections: 1/4 inch face seal male)	
V3	-30 in.Hg to 30 psig	-0.1 to 0.2 MPa
L	-30 in.Hg to 60 psig	-0.1 to 0.4 MPa
1	-30 in.Hg to 100 psig	-0.1 to 0.7 MPa
10	0 to 1000 psig	0 to 7 MPa
40	0 to 4000 psig	0 to 28 MPa

*1) Refer to gauge guide (P.94) for gauge specifications.

Bonnet option

Code	Bonnet
No code	Standard
P	Panel installation *4)

*4) Panel mounting hole: dia. 1.43 inch (36.3 mm).

Seat material

Code	Material
No code	PCTFE (Standard)
VS	Vespel® *3)

*3) Not available with SH material.

Pressure gauge unit *2)

Code	Unit
No code	psig/bar
MPA	MPa

*2) Pressure gauge unit MPa or psig/bar selectable. However under Japanese regulation, only MPa is available in Japan.

Porting Configuration

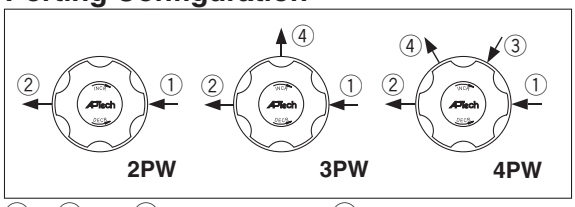

①IN ②OUT ③Gauge port (Inlet) ④Gauge port (Outlet)

Sample Order Number

	Port	①	②	③	④	
AP1601S	2PW	FV4	FV4			
	3PW	FV4	FV4		0	
	3PW	FV4	FV4		V3	
	4PW	FV4	FV4	1	V3	MPA

Specifications

Operating Parameters		AP1601	AP1602	AP1606	AP1610
Delivery pressure		1 to 10 psig (0.007 to 0.07 MPa)	1 to 30 psig (0.007 to 0.2 MPa)	2 to 60 psig (0.014 to 0.4 MPa)	2 to 100 psig (0.014 to 0.7 MPa)
Gas		Select compatible materials of construction for the gas			
Source pressure		Vacuum to 100 psig (0.7 MPa)	Vacuum to 3500 psig (24.1 MPa)		
Proof pressure (Inlet)		4000 psig (27.6 MPa)			
Burst pressure		8000 psig (55.2 MPa)			
Ambient and operating temperature		-40 to 71 °C (No freezing) *1)			
Cv		0.13			
Leak rate	**Inboard leakage**	2×10^{-11} Pa·m³/sec			
	Outboard leakage	2×10^{-10} Pa·m³/sec *2)			
Across the seat leak		4×10^{-9} Pa·m³/sec *3)			
Surface finish		Ra max 15 µin. (0.4 µm) Option: 10 µin. (0.25 µm), 7 µin. (0.18 µm), 5 µin. (0.13 µm)			
Connections		Face seal, Tube weld			
Bonnet port		NPT 1/8 inch *4)			
Supply pressure effect		0.25 psig (0.0017 MPa) rise in delivery pressure per 100 psig (0.7 MPa) source pressure drop			
Installation		Bottom mount (Option: panel mount)			
Internal volume		0.82 in³ (13.5 cm³)			
Mass		1.54 kg *5)			

*1) -10 to 90 °C for Vespel® seat.
*2) Tested with Helium gas inlet pressure 1500 psig (10.5 MPa).
*3) Tested with Helium gas inlet pressure 500 psig (3.5 MPa).
*4) On panel mount option, bonnet port is not threaded.
*5) Mass, including individual boxed weight, may vary depending on connections or options.

Wetted Parts Material

Wetted Parts	S	SH
Body	316L SS secondary remelt	
Surface finish	Electropolish + Passivation	
Poppet	316L SS	Hastelloy® C-22
Diaphragm	316L SS	Hastelloy® C-22
Nozzle	316L SS	Hastelloy® C-22
Seat	PCTFE (Option: Vespel®)	PCTFE

Dimensions

inch (mm)

AP1600

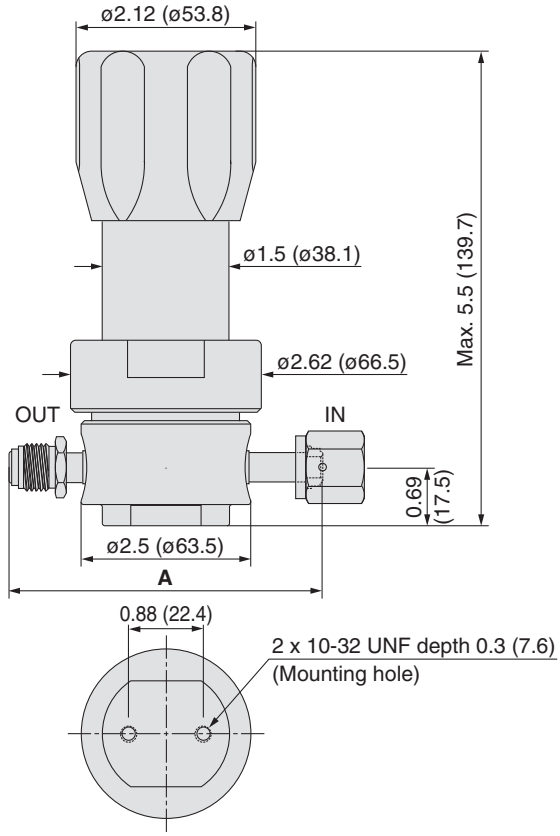

Connections	A	
	inch	(mm)
FV4	4.30	(109.2)
MV4		
TW4	3.46	(87.9)
FV6	5.22	(132.6)
MV6		
TW6	4.00	(101.6)

Flow Characteristics

AP1600

Inlet pressure: 2000 to 3000 psig (13.8 to 20.7 MPa) 1000 psig (0.69 MPa) 500 psig (3.4 MPa) 200 psig (1.4 MPa)

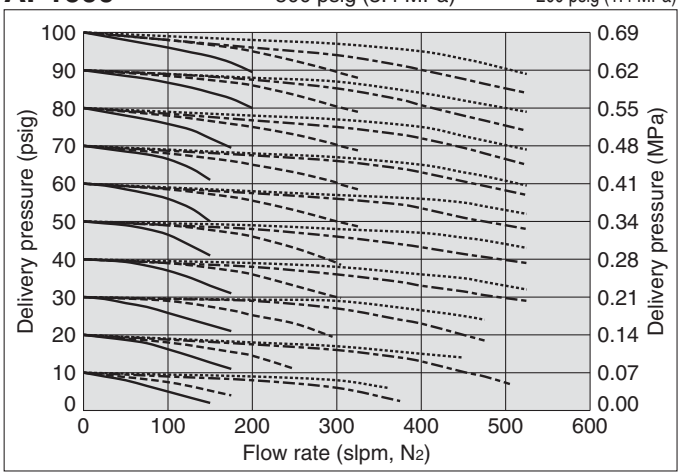

AP1600

Inlet pressure: 100 psig (0.69 MPa) 80 psig (0.55 MPa) 60 psig (0.41 MPa)

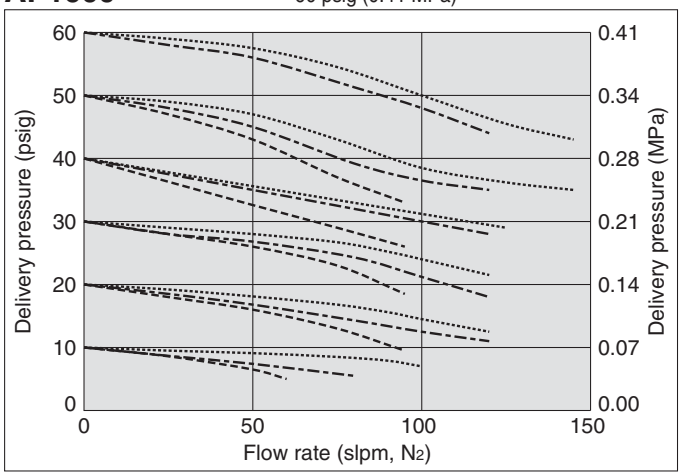

Hastelloy® is a registered trademark of Haynes International.
Vespel® is a registered trademark of DuPont.

Single Stage Regulator for Ultra High Purity

Low to intermediate flow (Tied-diaphragm)

Series AP1900

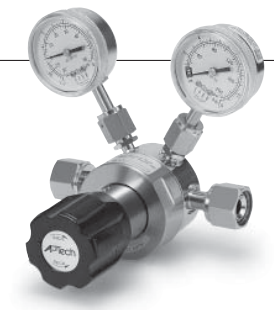

- **For UHP gas delivery**
- **High inlet pressure type: Max. 3500 psig (24.1 MPa)**
- **Body material: 316L SS secondary remelt**
- **Hastelloy internals available for corrosion resistance**
- **Tied-diaphragm design**

How to Order

AP19 01 S 2PW FV4 FV4

Port Number: ① FV4, ② FV4, ③, ④

Delivery pressure

Code	Delivery pressure
01	1 to 10 psig (0.007 to 0.07 MPa)
02	1 to 30 psig (0.007 to 0.2 MPa)
06	2 to 60 psig (0.014 to 0.4 MPa)
10	2 to 100 psig (0.014 to 0.7 MPa)
15	5 to 150 psig (0.034 to 1.0 MPa)

Material

Code	Body	Poppet	Diaphragm	Nozzle
S	316L SS secondary remelt	316L SS	316L SS	316L SS
SH		Hastelloy® C-22	Hastelloy® C-22	Hastelloy® C-22

Surface finish

Code	Surface finish Ra max
No code	15 µin. (0.4 µm) Standard
M	10 µin. (0.25 µm)
V	7 µin. (0.18 µm)
X	5 µin. (0.13 µm)

Ports

Code	Ports
2PW	2 ports
3PW	3 ports
4PW	4 ports

Connections (Inlet①, Outlet②)

Code	Connections
FV4	1/4 inch face seal (Female)
MV4	1/4 inch face seal (Male)
TW4	1/4 inch tube weld
FV6	3/8 inch face seal (Female)
MV6	3/8 inch face seal (Male)
TW6	3/8 inch tube weld
FV8	1/2 inch face seal (Female)
MV8	1/2 inch face seal (Male)
TW8	1/2 inch tube weld

Gauge port (Inlet③, Outlet④)

Code	Pressure gauge *1)	
	psig/bar unit	MPa unit
No code	No gauge port	
0	No pressure gauge (Connections: 1/4 inch face seal male)	
V3	-30 in.Hg to 30 psig	-0.1 to 0.2 MPa
L	-30 in.Hg to 60 psig	-0.1 to 0.4 MPa
1	-30 in.Hg to 100 psig	-0.1 to 0.7 MPa
10	0 to 1000 psig	0 to 7 MPa
40	0 to 4000 psig	0 to 28 MPa

*1) Refer to gauge guide (P.94) for gauge specifications.

Bonnet option

Code	Bonnet
No code	Standard
P	Panel installation *4)

*4) Panel mounting hole: dia.1.43 inch (36.3 mm).

Option

Code	Specification
No code	Standard (Cv: 0.13)
HF	High flow (Cv: 0.16)

Seat material

Code	Material
No code	PCTFE (Standard)
VS	Vespel® *3)

*3) Not available with SH material.

Pressure gauge unit *2)

Code	Unit
No code	psig/bar
MPA	MPa

*2) Pressure gauge unit MPa or psig/bar selectable. However under Japanese regulation, only MPa is available in Japan.

Porting Configuration

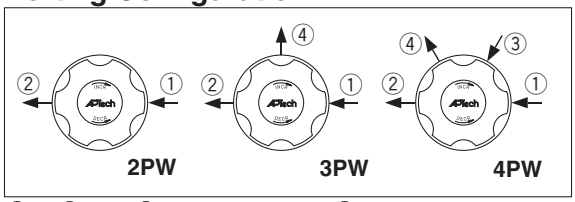

①IN ②OUT ③Gauge port (Inlet) ④Gauge port (Outlet)

Sample Order Number

	Port	①	②	③	④	
AP1901S	2PW	FV4	FV4			
	3PW	FV4	FV4		0	
	3PW	FV4	FV4		V3	MPA
	4PW	FV4	FV4	40	V3	MPA

Specifications

Operating Parameters		AP1901	AP1902	AP1906	AP1910	AP1915
Delivery pressure		1 to 10 psig (0.007 to 0.07 MPa)	1 to 30 psig (0.007 to 0.2 MPa)	2 to 60 psig (0.014 to 0.4 MPa)	2 to 100 psig (0.014 to 0.7 MPa)	5 to 150 psig (0.034 to 1.0 MPa)
Gas		Select compatible materials of construction for the gas				
Source pressure		Vacuum to 3500 psig (24.1 MPa)				
Proof pressure (Inlet)		4000 psig (27.6 MPa)				
Burst pressure		8000 psig (55.2 MPa)				
Ambient and operating temperature		-40 to 71 °C (No freezing) *1)				
Cv		0.13				
Leak rate	**Inboard leakage**	2×10^{-11} Pa·m³/sec				
	Outboard leakage	2×10^{-10} Pa·m³/sec *2)				
Across the seat leak		4×10^{-9} Pa·m³/sec *3)				
Surface finish		Ra max 15 µin. (0.4 µm) Option: 10 µin. (0.25 µm), 7 µin. (0.18 µm), 5 µin. (0.13 µm)				
Connections		Face seal, Tube weld				
Bonnet port		NPT 1/8 inch *4)				
Supply pressure effect		0.25 psig (0.0017 MPa) rise in delivery pressure per 100 psig (0.7 MPa) source pressure drop				
Installation		Bottom mount (Option: panel mount)				
Internal volume		0.82 in³ (13.5 cm³)				
Mass		1.54 kg *5)				

*1) -10 to 90 °C for Vespel® seat.
*2) Tested with Helium gas inlet pressure 1500 psig (10.5 MPa).
*3) Tested with Helium gas inlet pressure 1000 psig (7 MPa).
*4) On panel mount option, bonnet port is not threaded.
*5) Mass, including individual boxed weight, may vary depending on connections or options.

Option

High flow

Higher flow capacity with internal changes only, no change in external dimensions. Changes from the standard type are:

Option	Other Parameters	AP1901	AP1902	AP1906	AP1910	AP1915
HF	Cv	0.16				
	Supply pressure effect	0.6 psig (0.0042 MPa) rise in delivery pressure per 100 psig (0.7 MPa) source pressure drop				

Wetted Parts Material

Wetted Parts	S	SH
Body	316L SS secondary remelt	
Surface finish	Electropolish + Passivation	
Poppet	316L SS	Hastelloy® C-22
Diaphragm	316L SS	Hastelloy® C-22
Nozzle	316L SS	Hastelloy® C-22
Seat	PCTFE (Option: Vespel®)	PCTFE

Dimensions

inch (mm)

AP1900

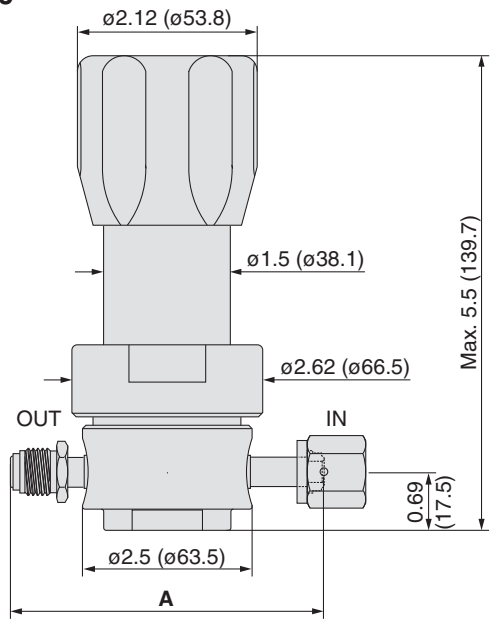

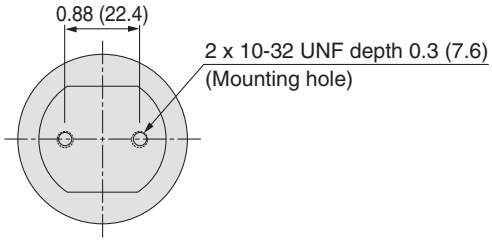

Connections	A inch	A (mm)
FV4	4.30	(109.2)
MV4		
TW4	3.46	(87.9)
FV6	5.22	(132.6)
MV6		
TW6	4.00	(101.6)
FV8	5.22	(132.6)
MV8		
TW8	4.34	(110.2)

Flow Characteristics

AP1900

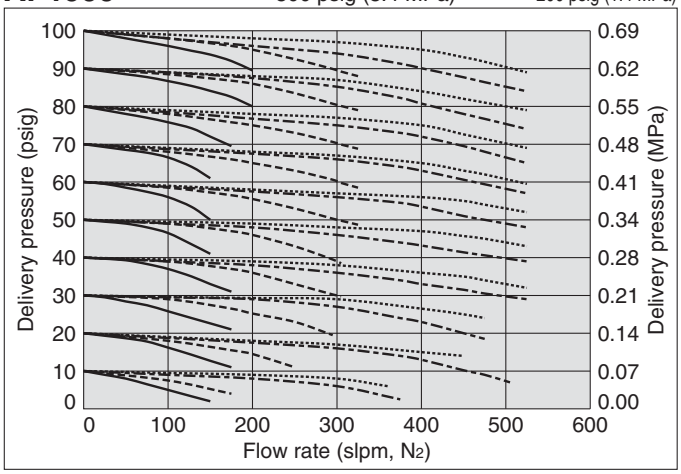

AP1900

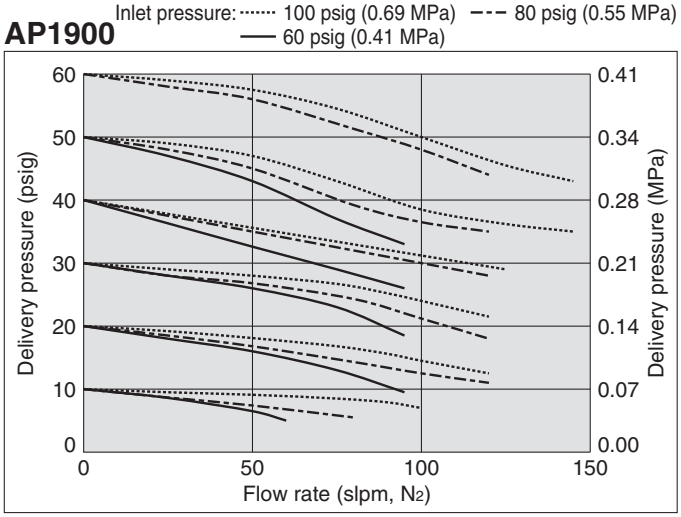

AP1900HF

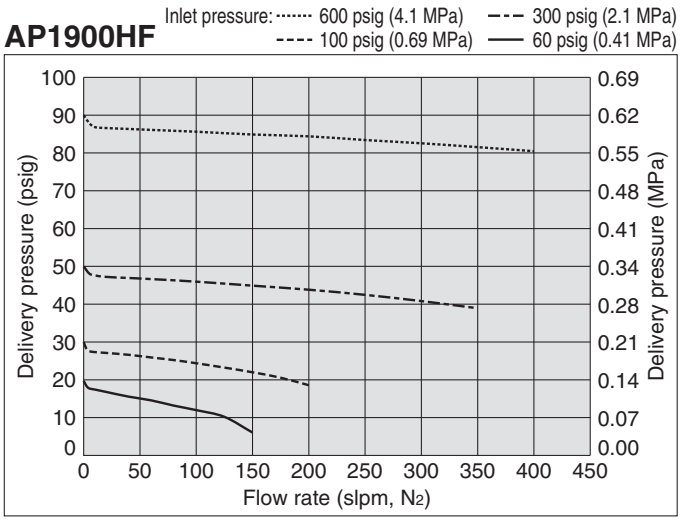

Hastelloy® is a registered trademark of Haynes International.
Vespel® is a registered trademark of DuPont.

Single Stage Regulator for Ultra High Purity | Intermediate flow (Tied-diaphragm)

Series AP1400T

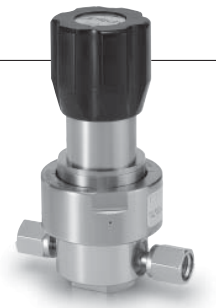

- For UHP gas delivery
- High inlet pressure type Standard: Max. 2300 psig(15.9 MPa)
  HR(option): Max. 3000 psig (20.7 MPa)
- Flow capacity : to 400 slpm
- Body material: 316L SS secondary remelt
- Hastelloy internals standard
- Sub-atmospheric pressure delivery option
- Tied-diaphragm design

How to Order

Port Number ① ② ③ ④

AP14 02 T S □ □ 2PW FV4 FV4 □ □ □ □ □ □

Delivery pressure

Code	Delivery pressure
02	1 to 30 psig (0.007 to 0.2 MPa)
	Sub-atmospheric(A):100 mm Hg absolute to 30 psig (-88 kPa to 0.2 MPa)
06	2 to 60 psig (0.014 to 0.4 MPa)
10	2 to 100 psig (0.014 to 0.7 MPa)
15	5 to 150 psig (0.034 to 1.0 MPa)

Material

Code	Body	Poppet	Diaphragm	Nozzle
S	316L SS secondary remelt	Hastelloy® C-22	Hastelloy® C-22	316L SS
SH				Hastelloy® C-22

Surface finish

Code	Surface finish Ra max
No code	15 µin. (0.4 µm) Standard
M	10 µin. (0.25 µm)
V	7 µin. (0.18 µm)
X	5 µin. (0.13 µm)

Range options *1)

Code	Range
No code	Standard
A	Sub-atmospheric

*1) Only available with AP1402T.

Porting Configuration

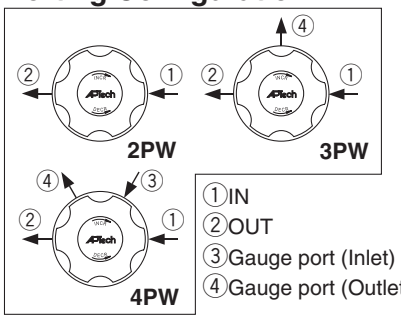

Ports

Code	Ports
2PW	2 ports
3PW	3 ports
4PW	4 ports

Connections (Inlet①, Outlet②)

Code	Connections
FV4	1/4 inch face seal (Female)
MV4	1/4 inch face seal (Male)
TW4	1/4 inch tube weld
FV6	3/8 inch face seal (Female)
MV6	3/8 inch face seal (Male)
TW6	3/8 inch tube weld
FV8	1/2 inch face seal (Female)
MV8	1/2 inch face seal (Male)
TW8	1/2 inch tube weld

Gauge port (Inlet③, Outlet④)

Code	Pressure gauge *2) psig/bar unit	Pressure gauge *2) MPa unit
No code	No gauge port	
0	No pressure gauge (Connections: 1/4 inch face seal male)	
V3	-30 in.Hg to 30 psig	-0.1 to 0.2 MPa
L	-30 in.Hg to 60 psig	-0.1 to 0.4 MPa
1	-30 in.Hg to 100 psig	-0.1 to 0.7 MPa
H	-30 in.Hg to 160 psig	-0.1 to 1.1 MPa
2	0 to 200 psig	0 to 1.4 MPa
4	0 to 400 psig	0 to 3 MPa
10	0 to 1000 psig	0 to 7 MPa
40	0 to 4000 psig	0 to 28 MPa

*2) Refer to gauge guide (P.94) for gauge specifications.

Sample Order Number

	Port ①	②	③	④		
AP1410T	2PW	FV4	FV4			
	3PW	FV4	FV4		0	
	3PW	FV4	FV4		1	MPA
	4PW	FV4	FV4	40	1	MPA

Bonnet option

Code	Bonnet
No code	Standard
P	Panel installation *6)
SC	Short type *7)

*6) Panel mounting hole: 1.56 inch (39.6 mm).
*7) Bonnet port is not threaded. SC option not available with 1402TA option.

Option

Code	Specification
No code	Standard
HR	High inlet pressure (Max. inlet pressure 3000 psig (20.7MPa)) *5)

*5) Not available with AP1402T and AP1406T.

Seat material

Code	Material
No code	PCTFE (Standard)
VS	Vespel® *4)

*4) Not available with SH material.

Pressure gauge unit *3)

Code	Unit
No code	psig/bar
MPA	MPa

*3) Pressure gauge unit MPa or psig/bar selectable. However under Japanese regulation, only MPa is available in Japan.

Specifications

Operating Parameters		AP1402T□□A	AP1402T	AP1406T	AP1410T	AP1415T
Delivery pressure		100 mm Hg absolute to 30 psig (-88kPa to 0.2MPa)	1 to 30 psig (0.007 to 0.2 MPa)	2 to 60 psig (0.014 to 0.4 MPa)	2 to 100 psig (0.014 to 0.7 MPa)	5 to 150 psig (0.034 to 1.0 MPa) (Source pressure 1000 psig or less) *1)
Gas		Select compatible materials of construction for the gas				
Source pressure		Vacuum to 300 psig (2.1 MPa)	Vacuum to 2300 psig(15.9 MPa)			
Proof pressure (Inlet)		4000 psig (27.6 MPa)				
Burst pressure		8000 psig (55.2 MPa)				
Ambient and operating temperature		-40 to 71 °C (No freezing) *2)				
Cv		0.45				
Leak rate	Inboard leakage	2×10^{-11} Pa·m³/sec				
	Outboard leakage	2×10^{-10} Pa·m³/sec *3)				
Across the seat leak		4×10^{-9} Pa·m³/sec *4)				
Surface finish		Ra max 15 µin. (0.4 µm)	Option: 10 µin. (0.25 µm), 7 µin. (0.18 µm), 5 µin. (0.13 µm)			
Connections		Face seal, Tube weld				
Bonnet port		NPT 1/8 inch *5)				
Supply pressure effect		1.6 psig(0.011 MPa) rise in delivery pressure per 100 psig (0.7 MPa) source pressure drop				
Installation		Bottom mount (Option: panel mount)				
Internal volume		1.06 in³ (17.4 cm³)				
Mass		2.04 kg *6)				

*1) Source pressure above 1000 psig (6.9 MPa) decreases maximum delivery pressure to less than 150 psig (1 MPa) due to supply pressure effect. When the source pressure is 2300 psig (15.9 MPa), achievable delivery pressure is around 129 psig (0.89 MPa).
*2) -10 to 90 °C for Vespel® seat.
*3) Tested with Helium gas inlet pressure 1500 psig (10.5 MPa).
*4) Tested with Helium gas inlet pressure 1000 psig (7 MPa).
*5) On panel mount option, bonnet port is not threaded.
*6) Mass, including individual boxed weight, may vary depending on connections or options.

Option

High inlet pressure

Changes from the standard type are:

Option	Other Parameters	AP1410T	AP1415T
HR	**Source pressure**	Vacuum to 3000 psig (20.7 MPa)	
	Proof pressure (Inlet)	4500 psig (31 MPa)	
	Burst pressure	9000 psig (62 MPa)	

Wetted Parts Material

Wetted Parts	S	SH
Body	316L SS secondary remelt	
Surface finish	Electropolish + Passivation	
Poppet	Hastelloy® C-22	
Diaphragm	Hastelloy® C-22	
Nozzle	316L SS	Hastelloy® C-22
Seat	PCTFE (Option: Vespel®)	PCTFE

Dimensions

inch (mm)

AP1400T

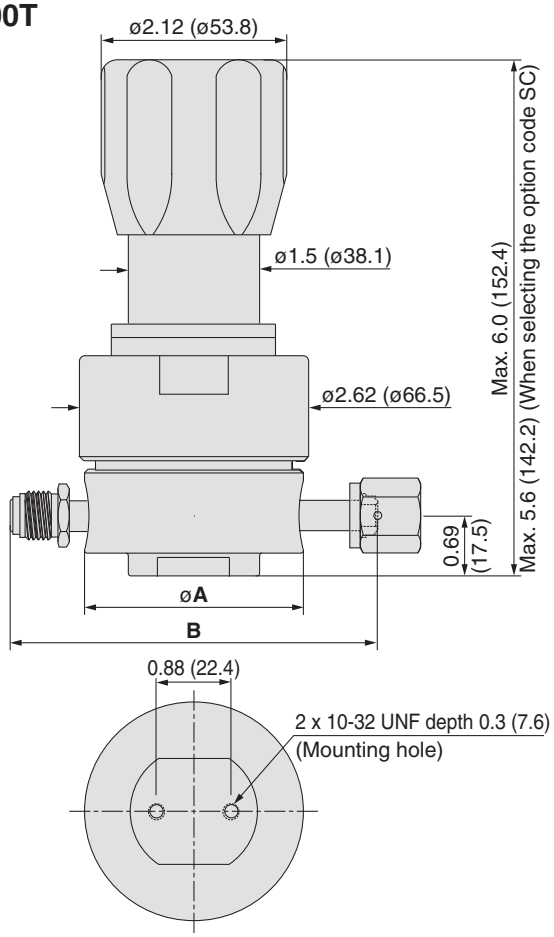

Connections	A		B	
	inch	(mm)	inch	(mm)
FV4	2.00	(50.8)	3.70	(94.0)
MV4			4.00	(101.6)
TW4			3.46	(87.9)
FV6	2.50	(63.5)	5.22	(132.6)
MV6				
TW6			4.00	(101.6)
FV8			5.22	(132.6)
MV8				
TW8			4.34	(110.2)

Flow Characteristics

AP1400T

Inlet pressure: ---- 80 psig (0.55 MPa) —— 60 psig (0.41 MPa)

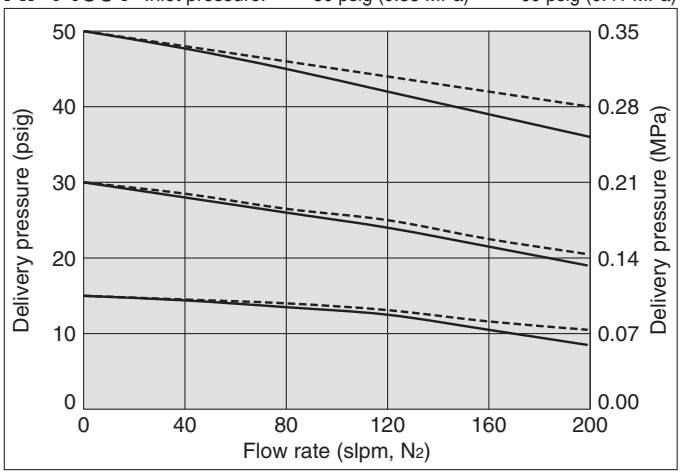

AP1400T

Inlet pressure: --- 2000 psig (13.8 MPa) ---- 600 psig (4.1 MPa) —— 200 psig (1.4 MPa)

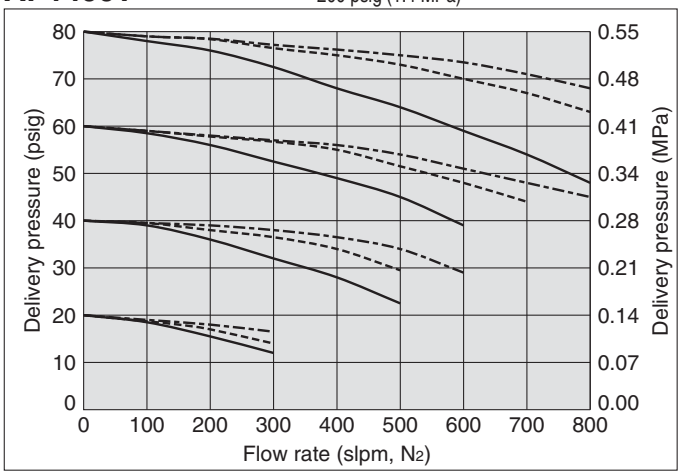

AP1402TA

Inlet pressure: 0 psig (0 kPa)

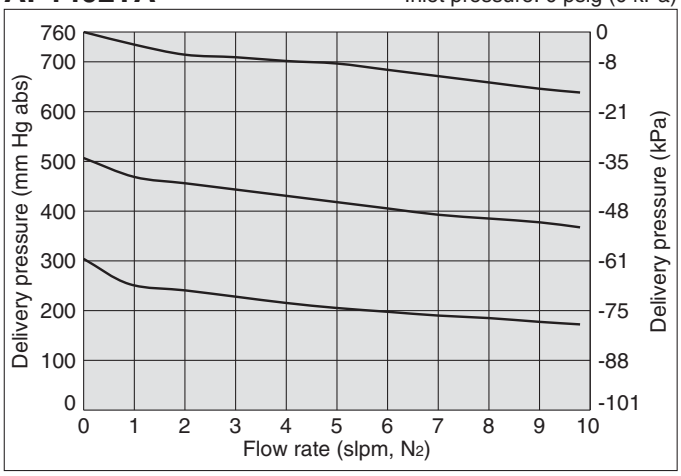

Hastelloy® is a registered trademark of Haynes International.
Vespel® is a registered trademark of DuPont.

Single Stage Regulator for Ultra High Purity

High flow (Tied-diaphragm)

Series AP1200

- For UHP gas delivery
- High inlet pressure type Standard: Max. 1700 psig(11.7 MPa)
  HR(option): Max. 3000 psig (20.7 MPa)
- Flow capacity Standard: to 800 slpm
  HF (option): to 1000 slpm
  FC (option): to 1500 slpm
- Body material: 316L SS secondary remelt
- Hastelloy internals available for corrosion resistance
- Tied-diaphragm design

How to Order

AP12 02 S 2PW FV8 FV8

Port Number: ① ② ③ ④

Delivery pressure

Code	Delivery pressure
02	1 to 30 psig (0.007 to 0.2 MPa)
06	2 to 60 psig (0.014 to 0.4 MPa)
10	2 to 100 psig (0.014 to 0.7 MPa)
15	5 to 150 psig (0.034 to 1.0 MPa)
25	Preset to 250 psig (1.7 MPa)

Material

Code	Body	Poppet	Diaphragm	Nozzle
S	316L SS secondary remelt	316L SS	Hastelloy® C-22	316L SS
SHP		Hastelloy® C-22		Hastelloy® C-22
SH				

Surface finish

Code	Surface finish Ra max
No code	15 µin. (0.4 µm) Standard
M	10 µin. (0.25 µm)
V	7 µin. (0.18 µm)
X	5 µin. (0.13 µm)

Ports

Code	Ports
2PW	2 ports
3PW	3 ports
4PW	4 ports

Connections (Inlet①, Outlet②)

Code	Connections
FV4	1/4 inch face seal (Female)
MV4	1/4 inch face seal (Male)
TW4	1/4 inch tube weld
FV6	3/8 inch face seal (Female)
MV6	3/8 inch face seal (Male)
TW6	3/8 inch tube weld
FV8	1/2 inch face seal (Female)
MV8	1/2 inch face seal (Male)
TW8	1/2 inch tube weld
FV12	3/4 inch face seal (Female)
MV12	3/4 inch face seal (Male)
TW12	3/4 inch tube weld

Bonnet option

Code	Bonnet
No code	Standard
P	Panel installation *7)
SC	Short type *8)

*7) Panel mounting hole: dia. 1.56 inch (39.6 mm).
*8) Bonnet port is not threaded.
SC option not available with FC or HR option.

Option

Code	Specification
No code	Standard (Cv: 0.65)
HF	High flow (Cv: 1.1)
FC	Force compensation (Cv: 0.65) *4)*5)
HR	High inlet pressure (Max. inlet pressure 3000 psig (20.7 MPa)) *4)*6)

*4) FC and HR options are not available with AP1202, AP1206 and AP1225.
*5) FC option is available with connection size 1/2 or 3/4 inch.
*6) 3/4 inch face seal fittings rated to 2400 psig (16.5 MPa) maximum.

Pressure gauge unit *2)

Code	Unit
No code	psig/bar
MPA	MPa

*2) Pressure gauge unit MPa or psig/bar selectable. However under Japanese regulation, only MPa is available in Japan.

Porting Configuration

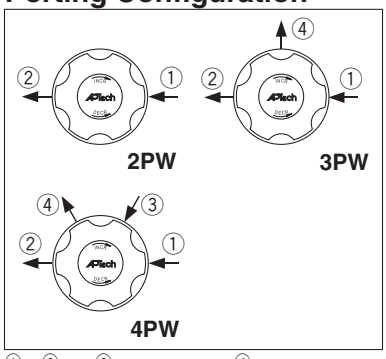

①IN ②OUT ③Gauge port (Inlet) ④Gauge port (Outlet)

Gauge port (Inlet③, Outlet④)

Code	Pressure gauge *1) psig/bar unit	MPa unit
No code	No gauge port	
0	No pressure gauge (Connections: 1/4 inch face seal male)	
V3	-30 in.Hg to 30 psig	-0.1 to 0.2 MPa
L	-30 in.Hg to 60 psig	-0.1 to 0.4 MPa
1	-30 in.Hg to 100 psig	-0.1 to 0.7 MPa
H	-30 in.Hg to 160 psig	-0.1 to 1.1 MPa
2	0 to 200 psig	0 to 1.4 MPa
4	0 to 400 psig	0 to 3 MPa
10	0 to 1000 psig	0 to 7 MPa
40	0 to 4000 psig	0 to 28 MPa

*1) Refer to gauge guide (P.94) for gauge specifications.

Sample Order Number

	Port ①	②	③	④		
AP1210S	2PW	FV8	FV8			
	3PW	FV8	FV8		0	
	3PW	FV8	FV8		1	MPA
	4PW	FV8	FV8	40	1	MPA

Seat material

Code	Material
No code	PCTFE (Standard)
VS	Vespel® *3)

*3) Not available with SHP and SH materials.

Specifications

Operating Parameters		AP1202	AP1206	AP1210	AP1215	AP1225
Delivery pressure		1 to 30 psig (0.007 to 0.2 MPa)	2 to 60 psig (0.014 to 0.4 MPa)	2 to 100 psig (0.014 to 0.7 MPa)	5 to 150 psig (0.034 to 1.0 MPa) (Source pressure 1000psig or less) *1)	Preset to 250 psig (1.7 MPa) *2)
Gas		Select compatible materials of construction for the gas				
Source pressure		Vacuum to 1700 psig (11.7 MPa)				
Proof pressure (Inlet)		2550 psig (17.6 MPa)				
Burst pressure		8000 psig (55.2 MPa)				
Ambient and operating temperature		-40 to 71 °C (No freezing) *3)				
Cv		0.65				
Leak rate	Inboard leakage	2×10^{-11} Pa·m³/sec				
	Outboard leakage	2×10^{-10} Pa·m³/sec *4)				
Across the seat leak		4×10^{-9} Pa·m³/sec *5)				
Surface finish		Ra max 15 µin. (0.4 µm) Option: 10 µin. (0.25 µm), 7 µin. (0.18 µm), 5 µin. (0.13 µm)				
Connections		Face seal, Tube weld				
Bonnet port		NPT 1/8 inch *6)				
Supply pressure effect		3.5 psig (0.024 MPa) rise in delivery pressure per 100 psig (0.7 MPa) source pressure drop				
Installation		Bottom mount (Option: panel mount)				
Internal volume		1.07 in³ (17.6 cm³)				
Mass		2.0 kg *7)				

*1) Source pressure above 1000 psig (6.9 MPa) decreases maximum delivery pressure to less than 150 psig (1 MPa) due to supply pressure effect. When the source pressure is 1700 psig (11.7 MPa), achievable delivery pressure is around 125 psig (0.86 MPa) (HF and FC option 120 psig (0.83 MPa)).
*2) 250 psig outlet pressure preset at 800 psig (5.5MPa) inlet pressure. Custom inlet/outlet pressure settings available. Please contact SMC.
*3) -10 to 90 ? for Vespel® seat.
*4) Tested with Helium gas inlet pressure 1500 psig (10.5 MPa).
*5) Tested with Helium gas inlet pressure 1000 psig (7 MPa).
*6) On panel mount option, bonnet port is not threaded.
*7) Mass, including individual boxed weight, may vary depending on connections or options.

Options

1. High flow

Higher flow capacity with internal changes only, no change in external dimensions. Changes from the standard type are:

Option	Other Parameters	AP1202	AP1206	AP1210	AP1215	AP1225
HF	Cv	1.1				
	Supply pressure effect	4.2 psig (0.029 MPa) rise in delivery pressure per 100 psig (0.7 MPa) source pressure drop				

2. Force compensation

Force compensation feature added to HF option and has wider flow capacity than HF option. Changes from the standard type are:

Option	Other Parameters	AP1210	AP1215
FC	Source pressure	Vacuum to 300 psig (2.1 MPa)	
	Cv	0.65	
	Supply pressure effect	4.2 psig (0.029 MPa) rise in delivery pressure per 100 psig (0.7 MPa) source pressure drop	
	Connections	1/2, 3/4 inch face seal, 1/2, 3/4 inch tube weld	

3. High inlet pressure

Changes from the standard type are:

Option	Other Parameters	AP1210	AP1215
HR	Source pressure	Vacuum to 3000 psig (20.7 MPa) *)	
	Proof pressure (Inlet)	4500 psig (31 MPa)	
	Burst pressure	9000 psig (62 MPa)	

*) 3/4 inch face seal fittings rated to 2400 psig (16.5 MPa) maximum.

Dimensions

inch (mm)

AP1200

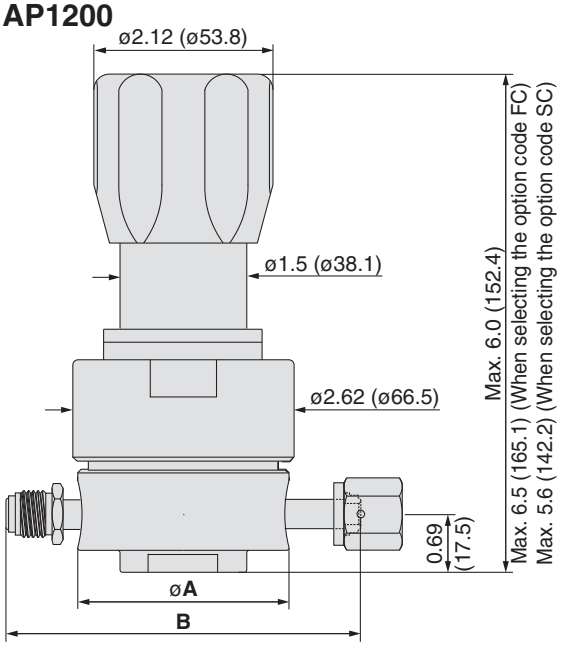

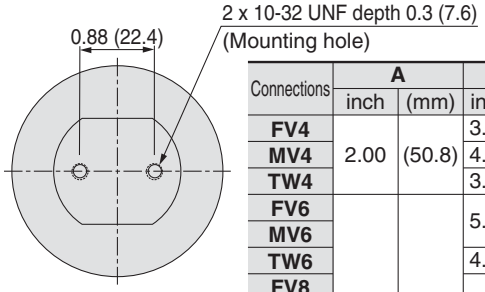

Connections	A inch	A (mm)	B inch	B (mm)
FV4	2.00	(50.8)	3.70	(94.0)
MV4			4.00	(101.6)
TW4			3.46	(87.9)
FV6	2.50	(63.5)	5.22	(132.6)
MV6				
TW6			4.00	(101.6)
FV8			5.22	(132.6)
MV8				
TW8			4.34	(110.2)
FV12			6.26	(159.0)
MV12				
TW12			5.00	(127.0)

Hastelloy® is a registered trademark of Haynes International.
Vespel® is a registered trademark of DuPont.

Wetted Parts Material

Wetted Parts	S	SHP	SH
Body	316L SS secondary remelt		
Surface finish	Electropolish + Passivation		
Poppet	316L SS	Hastelloy® C-22	
Diaphragm	Hastelloy® C-22		
Nozzle	316L SS		Hastelloy® C-22
Seat	PCTFE (Option: Vespel®)	PCTFE	

Flow Characteristics

AP1200

Inlet pressure: ---- 80 psig (0.55 MPa) —— 60 psig (0.41 MPa)
1/2 inch connections *)

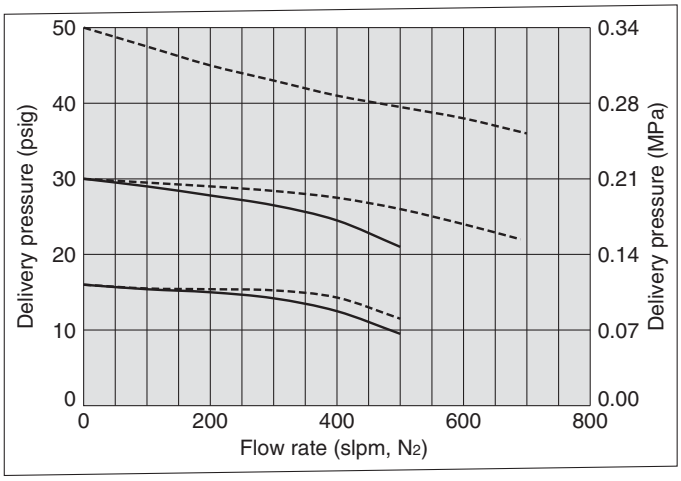

AP1200HF

Inlet pressure: --- 150 psig (1.0 MPa) ---- 100 psig (0.69 MPa)
—— 50 psig (0.35 MPa)

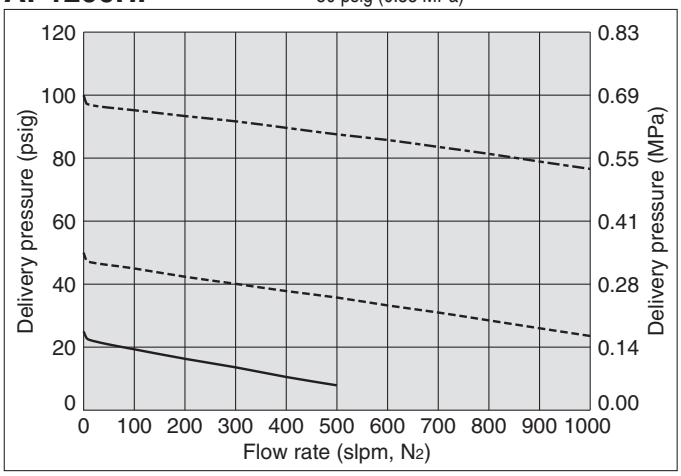

AP1200FC

Inlet pressure:150 psig (1.0 MPa) 3/4 inch connections *)

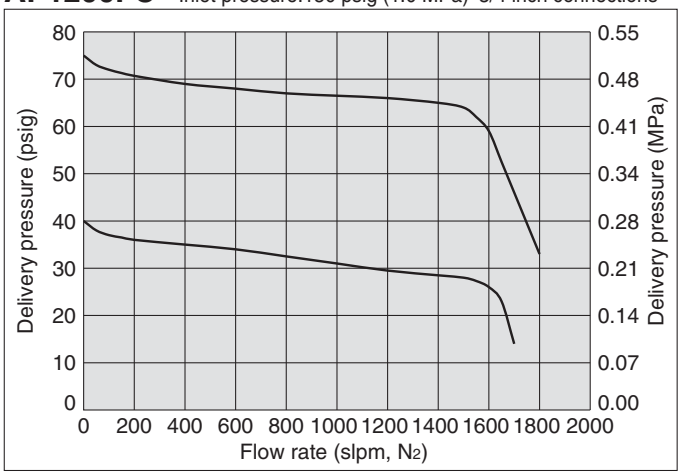

*) If connection size differs, flow characteristics also differ.

Single Stage Regulator for Ultra High Purity

Delivery of sub-atmospheric pressure

Series AP1100

- **For UHP gas delivery**
- **Sub-atmospheric to low positive pressure delivery**
- **Flow capacity : to 0.5 slpm**
- **Body material: 316L SS secondary remelt**
- **Hastelloy internals available for corrosion resistance**

How to Order

Port Number ① ② ③ ④

AP11 01 S 2PW FV4 FV4

Delivery pressure

Code	Delivery pressure
01	100 mm Hg absolute to 10 psig (-88 kPa to 0.07 MPa)

Material

Code	Body	Poppet	Diaphragm	Nozzle
S	316L SS secondary remelt	316L SS	316L SS	316L SS
SHP		Hastelloy® C-22	Hastelloy® C-22	Hastelloy® C-22
SH				
H	Hastelloy® C-22			

Surface finish

Code	Surface finish Ra max
No code	15 µin. (0.4 µm) Standard
M	10 µin. (0.25 µm)
V	7 µin. (0.18 µm)
X	5 µin. (0.13 µm)

Porting Configuration

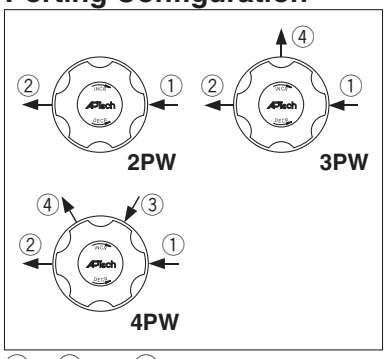

①IN ②OUT ③Gauge port (Inlet)
④Gauge port (Outlet)

Ports

Code	Ports
2PW	2 ports
3PW	3 ports
4PW	4 ports

Connections (Inlet①, Outlet②)

Code	Connections
FV4	1/4 inch face seal (Female)
MV4	1/4 inch face seal (Male)
TW4	1/4 inch tube weld
FV6	3/8 inch face seal (Female)
MV6	3/8 inch face seal (Male)
TW6	3/8 inch tube weld

Gauge port (Inlet③, Outlet④)

Code	Pressure gauge *1)	
	psig/bar unit	MPa unit
No code	No gauge port	
0	No pressure gauge (Connections: 1/4 inch face seal male)	
V3	-30 in.Hg to 60 psig	-0.1 to 0.4 MPa
L	-30 in.Hg to 30 psig	-0.1 to 0.2 MPa

*1) Other range available. Refer to gauge guide (P.94).

Pressure gauge unit *2)

Code	Unit
No code	psig/bar
MPA	MPa

*2) Pressure gauge unit MPa or psig/bar selectable. However under Japanese regulation, only MPa is available in Japan.

Seat material

Code	Material
No code	PCTFE (Standard)
TF	PTFE *3)

*3) PTFE recommended for applications such as within a process tool.

Bonnet option

Code	Bonnet
No code	Standard
P	Panel installation *4)

*4) Panel mounting hole: dia 1.56 inch (39.6 mm).

Sample Order Number

	Port ①	②	③	④		
AP1101S	2PW	FV4	FV4			
	3PW	FV4	FV4		0	
	3PW	FV4	FV4		V3	MPA
	4PW	FV4	FV4	V3	V3	MPA

Specifications

Operating Parameters		AP1101
Delivery pressure		100 mm Hg absolute to 10 psig (-88 kPa to 0.07 MPa)
Gas		Select compatible materials of construction for the gas
Source pressure		Vacuum to 300 psig (2.1 MPa)
Proof pressure (Inlet)		500 psig (3.4 MPa)
Burst pressure		8000 psig (55.2 MPa)
Ambient and operating temperature		-40 to 71 °C (No freezing)
Cv		0.05
Leak rate	**Inboard leakage**	2×10^{-11} Pa·m³/sec
	Outboard leakage	2×10^{-10} Pa·m³/sec *1)
Across the seat leak		4×10^{-9} Pa·m³/sec *1)
Surface finish		Ra max 15 µin. (0.4 µm) Option: 10 µin. (0.25 µm), 7 µin. (0.18 µm), 5 µin. (0.13 µm)
Connections		Face seal, Tube weld
Bonnet port		NPT 1/8 inch *2)
Installation		Bottom mount (Option: panel mount)
Internal volume		0.49 in³ (8 cm³)
Mass		1.25 kg *3)

*1) Tested with Helium gas inlet pressure 300 psig (2.1 Mpa).
*2) On panel mount option, bonnet port is not threaded.
*3) Mass, including individual boxed weight, may vary depending on connections or options.

Wetted Parts Material

Wetted Parts	S	SHP	SH	H
Body	316L SS secondary remelt			Hastelloy® C-22
Surface finish	Electropolish + Passivation			Electropolish
Poppet	316L SS	Hastelloy® C-22		
Diaphragm	316L SS	Hastelloy® C-22		
Nozzle	316L SS		Hastelloy® C-22	
Seat	PCTFE (Option: PTFE)			

Dimensions

inch (mm)

AP1100

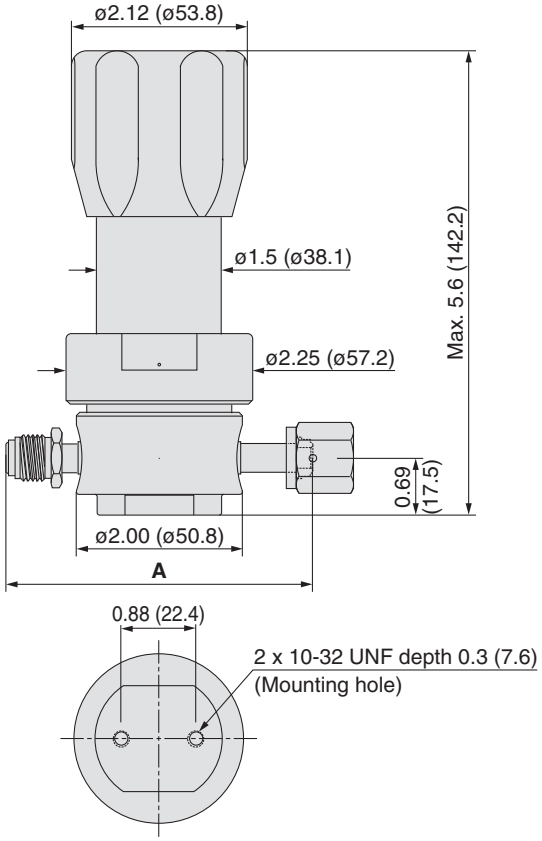

Connections	A	
	inch	(mm)
FV4	3.70	(94.0)
MV4		
TW4	2.96	(75.2)
FV6	4.70	(119.4)
MV6		
TW6	2.96	(75.2)

Flow Characteristics

AP1100

Inlet pressure: 2 psig (14 kPa)

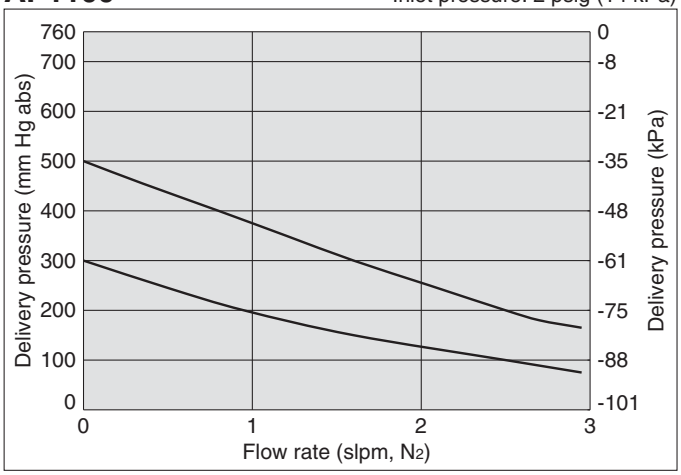

Hastelloy® is a registered trademark of Haynes International.

Two Stage Regulator for Ultra High Purity | Low flow (Tied-diaphragm)

Series AP1700

- For UHP gas delivery
- High inlet pressure type: Max. 3500 psig (24.1 MPa)
- Body material: 316L SS secondary remelt
- Hastelloy internals available for corrosion resistance
- Minimizes supply pressure effect by two stage regulation
- Tied-diaphragm design

How to Order

Port Number: ① ② ③ ④

AP17 02 S □ 2PW FV4 FV4 □ □ □ □ □

Delivery pressure

Code	Delivery pressure
02	1 to 30 psig (0.007 to 0.2 MPa)
06	2 to 60 psig (0.014 to 0.4 MPa)
10	2 to 100 psig (0.014 to 0.7 MPa)

Material

Code	Body	Poppet	Diaphragm	Nozzle
S	316L SS secondary remelt	316L SS	316L SS	316L SS
SH		Hastelloy® C-22	Hastelloy® C-22	Hastelloy® C-22

Surface finish

Code	Surface finish Ra max
No code	15 µin. (0.4 µm) Standard
M	10 µin. (0.25 µm)
V	7 µin. (0.18 µm)
X	5 µin. (0.13 µm)

Ports

Code	Ports
2PW	2 ports
4PW	4 ports

Porting Configuration

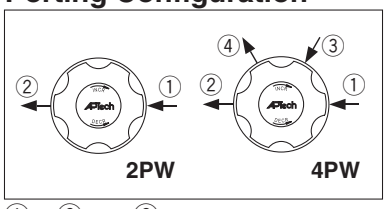

①IN ②OUT ③Gauge port (Inlet)
④Gauge port (Outlet)

Connections (Inlet①, Outlet②)

Code	Connections
FV4	1/4 inch face seal (Female)
MV4	1/4 inch face seal (Male)
TW4	1/4 inch tube weld
FV6	3/8 inch face seal (Female)
MV6	3/8 inch face seal (Male)
TW6	3/8 inch tube weld

Gauge port (Inlet③, Outlet④)

Code	Pressure gauge *1)	
	psig/bar unit	MPa unit
No code	No gauge port	
0	No pressure gauge (Connections: 1/4 inch face seal male)	
V3	-30 in.Hg to 30 psig	-0.1 to 0.2 MPa
L	-30 in.Hg to 60 psig	-0.1 to 0.4 MPa
1	-30 in.Hg to 100 psig	-0.1 to 0.7 MPa
H	-30 in.Hg to 160 psig	-0.1 to 1.1 MPa
2	0 to 200 psig	0 to 1.4 MPa
4	0 to 400 psig	0 to 3 MPa
10	0 to 1000 psig	0 to 7 MPa
40	0 to 4000 psig	0 to 28 MPa

*1) Refer to gauge guide (P.94) for gauge specifications.

Sample Order Number

	Port	①	②	③	④	
AP1702S	2PW	FV4	FV4			
	4PW	FV4	FV4	0	0	
	4PW	FV4	FV4	40	V3	MPA

Bonnet option

Code	Bonnet
No code	Standard
P	Panel installation *4)

*4) Panel mounting hole: dia.1.56 inch (39.6 mm).

Seat material

Code	Material
No code	PCTFE (Standard)
VS	Vespel® *3)

*3) Not available with SH material.

Pressure gauge unit *2)

Code	Unit
No code	psig/bar
MPA	MPa

*2) Pressure gauge unit MPa or psig/bar selectable. However under Japanese regulation, only MPa is available in Japan.

Specifications

Operating Parameters		AP1702	AP1706	AP1710
Delivery pressure		1 to 30 psig (0.007 to 0.2 MPa)	2 to 60 psig (0.014 to 0.4 MPa)	2 to 100 psig (0.014 to 0.7 MPa)
Gas		Select compatible materials of construction for the gas		
Source pressure		Vacuum to 3500 psig (24.1 MPa)		
First stage pressure		175 psig (1.2 MPa)		
Proof pressure (Inlet)		4000 psig (27.6 MPa)		
Burst pressure		8000 psig (55.2 MPa)		
Ambient and operating temperature		-40 to 71 °C (No freezing) *1)		
Cv		0.05		
Leak rate	Inboard leakage	2×10^{-11} Pa·m³/sec		
	Outboard leakage	2×10^{-10} Pa·m³/sec *2)		
Across the seat leak		4×10^{-9} Pa·m³/sec *3)		
Surface finish		Ra max 15 µin. (0.4 µm)	Option: 10 µin. (0.25 µm), 7 µin. (0.18 µm), 5 µin. (0.13 µm)	
Connections		Face seal, Tube weld		
Bonnet port		NPT 1/8 inch *4)		
Supply pressure effect		0.05 psig (0.00035 MPa) rise in delivery pressure per 100 psig (0.7 MPa) source pressure drop		
Installation		Option: panel mount		
Internal volume		0.92 in³ (15.1cm³)		
Mass		2.04 kg *5)		

*1) -10 to 90 °C for Vespel® seat.
*2) Tested with Helium gas inlet pressure 1500 psig (10.5 MPa).
*3) Tested with Helium gas inlet pressure 1000 psig (7 MPa).
*4) On panel mount option, bonnet port is not threaded.
*5) Mass, including individual boxed weight, may vary depending on connections or options.

Wetted Parts Material

Wetted Parts	S	SH
Body	316L SS secondary remelt	
Surface finish	Electropolish + Passivation	
Poppet	316L SS	Hastelloy® C-22
Diaphragm	316L SS	Hastelloy® C-22
Nozzle	316L SS	Hastelloy® C-22
Seat	PCTFE (Option: Vespel®)	PCTFE

Dimensions

inch (mm)

AP1700

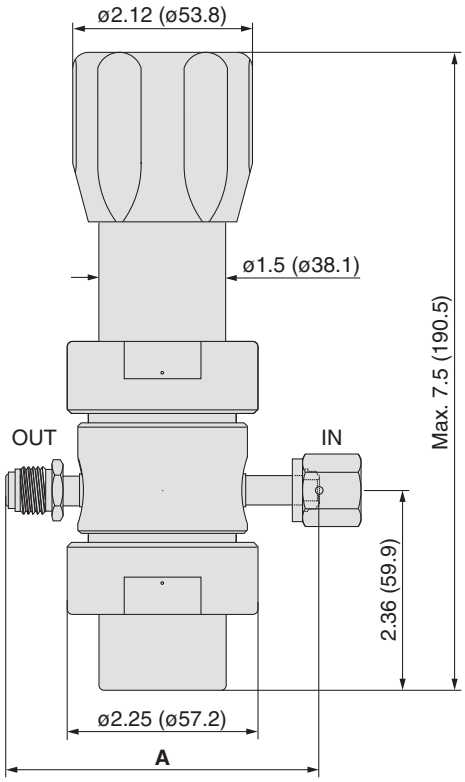

Connections	A	
	inch	(mm)
FV4	3.70	(94.0)
MV4		
TW4	2.96	(75.2)
FV6	4.70	(119.4)
MV6		
TW6	2.96	(75.2)

Flow Characteristics

AP1700

Inlet pressure: 200 to 3000 psig (1.4 to 20.7 MPa)

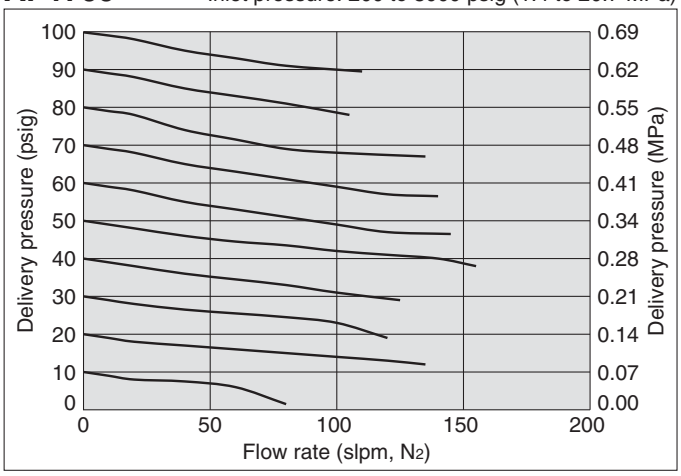

Hastelloy® is a registered trademark of Haynes International.
Vespel® is a registered trademark of DuPont.

Two Stage Regulator for Ultra High Purity

Intermediate flow (Tied-diaphragm)

Series AP2700

- For UHP gas delivery
- High inlet pressure type: Max. 3500 psig (24.1 MPa)
- Flow capacity to 150 slpm (NF_3)
  to 900 slpm (H_2)
- Body material: 316L SS secondary remelt
- Hastelloy internals available for corrosion resistance
- Minimizes supply pressure effect by two stage regulation
- Tied-diaphragm design

How to Order

Port Number ① ② ③ ④

AP27 02 S □ 2PW FV4 FV4 □ □ □ □ □

Delivery pressure

Code	Delivery pressure
02	1 to 30 psig (0.007 to 0.2 MPa)
06	2 to 60 psig (0.014 to 0.4 MPa)
10	2 to 100 psig (0.014 to 0.7 MPa)
12	3 to 120 psig (0.021 to 0.8 MPa)

Material

Code	Body	Poppet	Diaphragm	Nozzle
S	316L SS secondary remelt	316L SS	Hastelloy® C-22	316L SS
SH		Hastelloy® C-22		Hastelloy® C-22

Surface finish

Code	Surface finish Ra max
No code	15 µin. (0.4 µm) Standard
M	10 µin. (0.25 µm)
V	7 µin. (0.18 µm)
X	5 µin. (0.13 µm)

Connections (Inlet①, Outlet②)

Code	Connections
FV4	1/4 inch face seal (Female)
MV4	1/4 inch face seal (Male)
TW4	1/4 inch tube weld
FV6	3/8 inch face seal (Female)
MV6	3/8 inch face seal (Male)
TW6	3/8 inch tube weld

Ports

Code	Ports
2PW	2 ports
3PWQ	3 ports (1 pressure monitor port (MP))
4PW	4 ports
5PWQ	5 ports (1 pressure monitor port (MP))

Bonnet option

Code	Bonnet
No code	Standard
P	Panel installation *4)

*4) Panel mounting hole: dia. 1.56 inch (39.6 mm).

Seat material

Code	Material
No code	PCTFE (Standard)
VS	Vespel® *3)

*3) Not available with SH material.

Pressure gauge unit *2)

Code	Unit
No code	psig/bar
MPA	MPa

*2) Pressure gauge unit MPa or psig/bar selectable. However under Japanese regulation, only MPa is available in Japan.

Porting Configuration

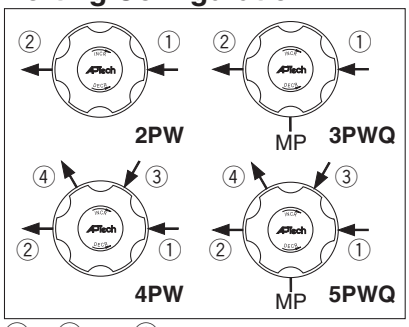

①IN ②OUT ③Gauge port (Inlet)
④Gauge port (Outlet) MP=Monitoring gauge port

Gauge port (Inlet③, Outlet④)

Code	Pressure gauge *1) psig/bar unit	Pressure gauge *1) MPa unit
No code	No gauge port	
0	No pressure gauge (Connections: 1/4 inch face seal male)	
V3	-30 in.Hg to 30 psig	-0.1 to 0.2 MPa
L	-30 in.Hg to 60 psig	-0.1 to 0.4 MPa
1	-30 in.Hg to 100 psig	-0.1 to 0.7 MPa
H	-30 in.Hg to 160 psig	-0.1 to 1.1 MPa
2	0 to 200 psig	0 to 1.4 MPa
4	0 to 400 psig	0 to 3 MPa
10	0 to 1000 psig	0 to 7 MPa
40	0 to 4000 psig	0 to 28 MPa

*1) Refer to gauge guide (P.94) for gauge specifications.

Sample Order Number

	Port			③	④	
AP2702S	2PW	FV4	FV4			
	3PWQ	FV4	FV4			
	4PW	FV4	FV4	40	V3	MPA
	5PWQ	FV4	FV4	40	V3	MPA

Specifications

Operating Parameters		AP2702	AP2706	AP2710	AP2712
Delivery pressure		1 to 30 psig (0.007 to 0.2 MPa)	2 to 60 psig (0.014 to 0.4 MPa)	2 to 100 psig (0.014 to 0.7 MPa)	3 to 120 psig (0.021 to 0.8 MPa)
Gas		Select compatible materials of construction for the gas			
Source pressure		Vacuum to 3500 psig (24.1 MPa)			
First stage pressure		200 psig (1.4 MPa)			
Proof pressure (Inlet)		4000 psig (27.6 MPa)			
Burst pressure		8000 psig (55.2 MPa)			
Ambient and operating temperature		-40 to 71 °C (No freezing) *1)			
Cv		0.105			
Leak rate	Inboard leakage	2×10^{-11} Pa·m³/sec			
	Outboard leakage	2×10^{-10} Pa·m³/sec *2)			
Across the seat leak		4×10^{-9} Pa·m³/sec *3)			
Surface finish		Ra max 15 µin. (0.4 µm) Option: 10 µin. (0.25 µm), 7 µin. (0.18 µm), 5 µin. (0.13 µm)			
Connections		Face seal, Tube weld			
Bonnet port		NPT 1/8 inch *4)			
Supply pressure effect		0.01 psig (0.00007 MPa) rise in delivery pressure per 100 psig (0.7 MPa) source pressure drop			
Installation		Option: panel mount			
Internal volume		1.87 in³ (30.6 cm³)			
Mass		2.27 kg *5)			

*1) -10 to 90 °C for Vespel® seat.
*2) Tested with Helium gas inlet pressure 1500 psig (10.5 Mpa).
*3) Tested with Helium gas inlet pressure 1000 psig (7 MPa).
*4) On panel mount option, bonnet port is not threaded.
*5) Mass, including individual boxed weight, may vary depending on connections or options.

Wetted Parts Material

Wetted Parts	S	SH
Body	316L SS secondary remelt	
Surface finish	Electropolish + Passivation	
Poppet	316L SS	Hastelloy® C-22
Diaphragm	316L SS / Hastelloy® C-22	Hastelloy® C-22
Nozzle	316L SS	Hastelloy® C-22
Seat	PCTFE (Option: Vespel®)	PCTFE

Dimensions

inch (mm)

AP2700

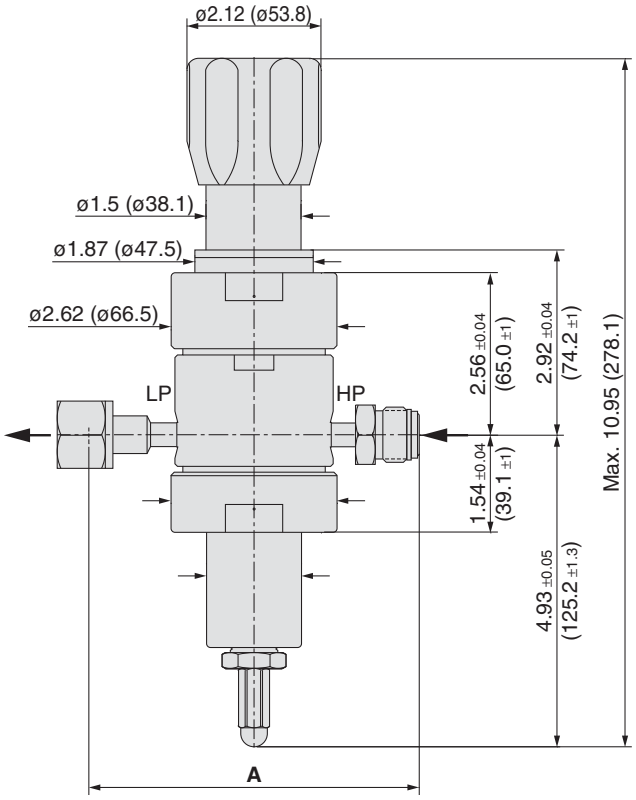

Connections	A	
	inch	(mm)
FV4	4.30	(109.2)
MV4		
TW4	3.46	(87.9)
FV6	5.22	(132.6)
MV6		
TW6	4.00	(101.6)

Flow Characteristics

AP2700

Inlet pressure: greater than 150 psig (1.0 MPa)

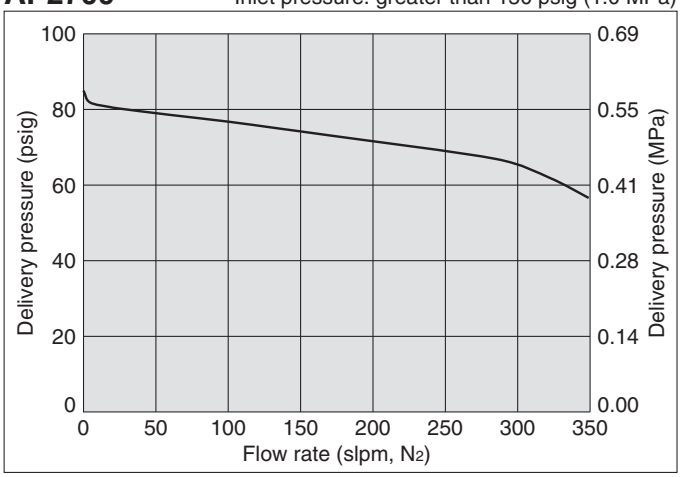

Hastelloy® is a registered trademark of Haynes International.
Vespel® is a registered trademark of DuPont.

Single Stage Regulator for Ultra High Purity | Bulk gas delivery

Series AP9000 & 9100

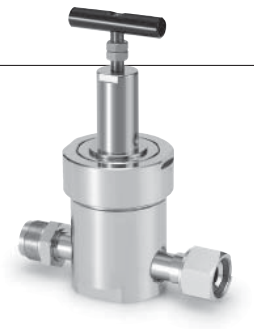

- **For UHP gas delivery**
- **Inlet pressure AP9000: Max. 1700 psig (11.7 MPa)**
  AP9100: Max. 800 psig (5.5 MPa)
- **Flow capacity AP9000: to 2000 slpm**
  AP9100: to 5000 slpm
- **Body material: 316L SS**
- **Tied-diaphragm design**

How to Order

AP9 0 10 S □ 2PW FV16 FV16 □ □ □

Port Number: ① FV16, ② FV16, ③ □

Size

Code	Cv
0	3
1	4

Delivery pressure

Code	Delivery pressure	Size 0	Size 1
10	5 to 100 psig (0.034 to 0.7 MPa)	●	●
15	5 to 150 psig (0.034 to 1.0 MPa)		●
30	Preset to 300 psig (2.1 MPa)	●	

Material

Code	Material
S	316L SS

Surface finish

Code	Surface finish Ra max
No code	15 µin. (0.4 µm)
M	10 µin. (0.25 µm)

Ports

Code	Ports
2PW	2 ports
3PW	3 ports

Connections (Inlet①, Outlet②)

Code	Connections
FV8	1/2 inch face seal (Female)
MV8	1/2 inch face seal (Male)
TW8	1/2 inch tube weld
FV12	3/4 inch face seal (Female)
MV12	3/4 inch face seal (Male)
TW12	3/4 inch tube weld
FV16	1 inch face seal (Female)
MV16	1 inch face seal (Male)
TW16	1 inch tube weld

Seat material

Code	Material
No code	PCTFE (Standard)
VS	Vespel®

Pressure gauge unit *2)

Code	Unit
No code	psig/bar
MPA	MPa

*2) Pressure gauge unit MPa or psig/bar selectable. However under Japanese regulation, only MPa is available in Japan.

Gauge ports (Outlet③)

Code	Pressure gauge*1) psig/bar unit	Pressure gauge*1) MPa unit
No code	No gauge port	
0	No pressure gauge (Connections: 1/4 inch face seal male)	
V3	-30 in.Hg to 30 psig	-0.1 to 0.2 MPa
L	-30 in.Hg to 60 psig	-0.1 to 0.4 MPa
1	-30 in.Hg to 100 psig	-0.1 to 0.7 MPa
H	-30 in.Hg to 160 psig	-0.1 to 1.1 MPa
4	0 to 400 psig	0 to 3 MPa

*1) Refer to gauge guide (P.94) for gauge specifications.

Sample Order Number

	Port	①	②	③	
AP9010S	2PW	FV12	FV12		
	3PW	FV12	FV12	H	MPA

Porting Configuration

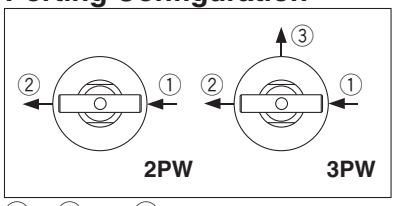

①IN ②OUT ③Gauge port (Outlet)

Specifications

Operating Parameters		AP9010	AP9030	AP9110	AP9115
Delivery pressure		5 to 100 psig (0.034 to 0.7 MPa)	Preset to 300 psig (2.1 MPa) *1)	5 to 100 psig (0.034 to 0.7 MPa)	5 to 150 psig (0.034 to 1.0 MPa)
Gas		Select compatible materials of construction for the gas			
Source pressure		Vacuum to 1700 psig (11.7 MPa)		Vacuum to 800 psig (5.5 MPa)	Vacuum to 250 psig (1.7 MPa)
Proof pressure (Inlet)		2550 psig (17.6 MPa)			
Burst pressure		6800 psig (46.9 MPa)			
Ambient and operating temperature		-40 to 71 °C (No freezing) *2)			
Cv		3.0		4.0	
Leak rate	**Inboard leakage**	2×10^{-11} Pa·m³/sec			
	Outboard leakage	2×10^{-10} Pa·m³/sec *3)			
Across the seat leak		4×10^{-9} Pa·m³/sec *3)			
Surface finish		Ra max 15 µin (0.4 µm) or 10 µin (0.25 µm)			
Connections		Face seal, Tube weld			
Bonnet port		NPT 1/8 inch			
Supply pressure effect		3.7 psig (0.026 MPa) rise in delivery pressure per 100 psig (0.7 MPa) source pressure drop		5.4 psig (0.038 MPa) rise in delivery pressure per 100 psig (0.7 MPa) source pressure drop	
Internal volume		12 in³ (197 cm³)			
Mass		5.9 kg *4)			

*1) At 800 psig (5.5 MPa) inlet pressure. Optional preset pressure available. Please contact SMC.
*2) -10 to 90 °C for Vespel® seat.
*3) Tested with Helium gas inlet pressure 300 psig (2.1 MPa).
*4) Mass, including individual boxed weight, may vary depending on connections or options.

Wetted Parts Material

Wetted Parts	S
Body	316L SS
Surface finish	Electropolish + Passivation
Poppet	Hastelloy® C-22
Bellows	Hastelloy® C-22
Nozzle	316L SS
Seat	PCTFE (Option: Vespel®)
Poppet spring	Elgiloy®
Bonnet seal	Nickel 200 *) (Silver plated)

*) 316 SS silver plated for AP9030

Dimensions

inch (mm)

AP9000 & 9100

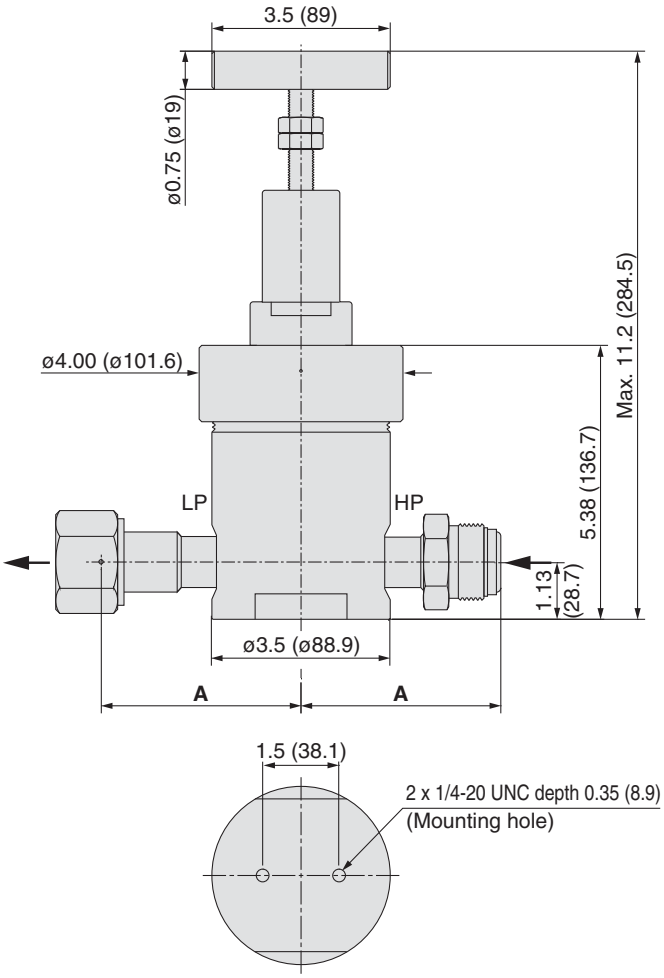

Connections	A	
	inch	(mm)
FV8	3.11	(79.0)
MV8		
TW8	4.75	(120.7)
FV12	3.64	(92.5)
MV12		
TW12	4.75	(120.7)
FV16	3.92	(99.6)
MV16		
TW16	4.75	(120.7)

Flow Characteristics

AP9010

Inlet pressure: 1000 psig (6.9 MPa) 300 psig (2.1 MPa) 200 psig (1.4 MPa) 75 psig (0.52 MPa)

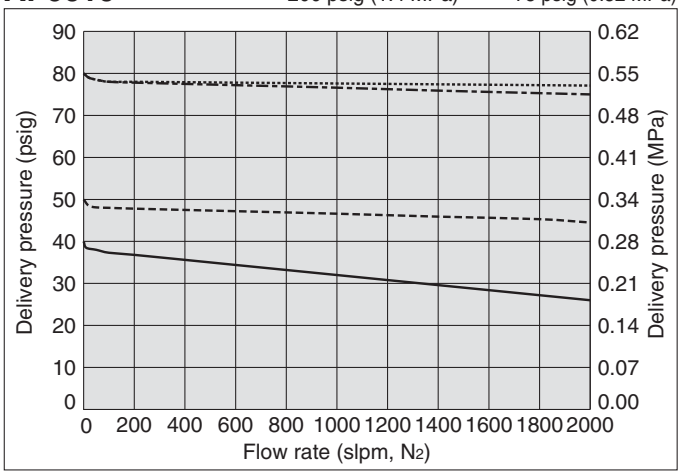

AP9030

Inlet pressure: 600 psig (4.1 MPa)

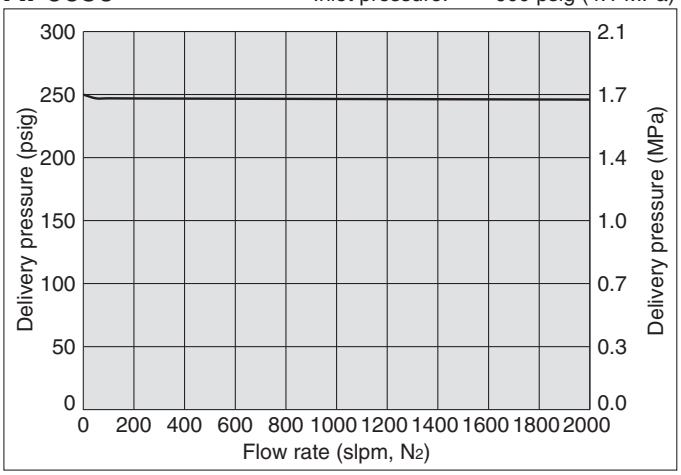

AP9110

Inlet pressure: 150 psig (1.0 MPa) 75 psig (0.52 MPa)

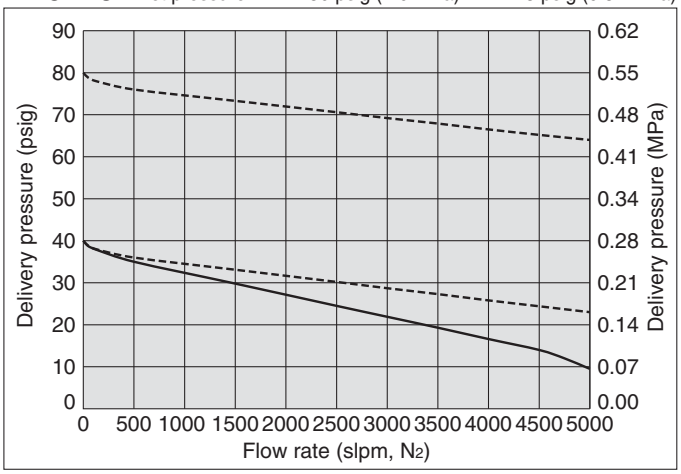

Hastelloy® is a registered trademark of Haynes International.
Elgiloy® is a registered trademark of Elgiloy Specialty Metals.
Vespel® is a registered trademark of DuPont.

Single Stage Compact Regulator for Ultra High Purity

Series SL5200

- **For UHP gas delivery**
- **Flow capacity Standard: to 30 slpm**
  HF (option): to 130 slpm
- **Body material: 316L SS secondary remelt**
- **Hastelloy internals available for corrosion resistance**
- **Sub-atmospheric pressure delivery option**
- **Springless design (No poppet spring in the wetted area)**

How to Order

SL52 02 S M □ 2PW FV4 FV4 □ □ □ □

Port Number: ① FV4, ② FV4, ③ □

Delivery pressure

Code	Delivery pressure
01	0.5 to 10 psig (0.0034 to 0.07 MPa)
	Sub-atmospheric (A): 100 mm Hg absolute to 10 psig (-88 kPa to 0.07 MPa)
02	0.5 to 30 psig (0.0034 to 0.2 MPa)
06	1 to 60 psig (0.007 to 0.4 MPa)
10	1 to 100 psig (0.007 to 0.7 MPa)

Material

Code	Body	Poppet	Diaphragm
S	316L SS secondary remelt	316L SS	316L SS
SH		Hastelloy® C-22	

Surface finish

Code	Surface finish Ra max
M	10 µin. (0.25 µm) Standard
V	7 µin. (0.18 µm)
X	5 µin. (0.13 µm)

Range options *1)

Code	Specification
No code	Standard
A	Sub-atmospheric

*1) Only available with SL5201.

Ports

Code	Ports
2PW	2 ports
3PW	3 ports

Connections (Inlet①, Outlet②)

Code	Connections
FV4	1/4 inch face seal (Female)
MV4	1/4 inch face seal (Male)
TW4	1/4 inch tube weld
FV6	3/8 inch face seal (Female)
MV6	3/8 inch face seal (Male)
TW6	3/8 inch tube weld

Gauge port (Outlet③)

Code	Connections or Pressure gauge *2)		
		psig/bar unit	MPa unit
No code	No gauge port		
0	No pressure gauge	1/4 inch face seal (Male)	
FV4		1/4 inch face seal (Female)	
V3	With pressure gauge	-30in.Hg to 30psig	-0.1 to 0.2 MPa
L		-30in.Hg to 60psig	-0.1 to 0.4 MPa
1		-30in.Hg to 100psig	-0.1 to 0.7 MPa

*2) Refer to gauge guide (P.94) for gauge specifications.

Option

Code	Specification
No code	Standard (Cv: 0.07)
HF	High flow (Cv: 0.15)

Seat material

Code	Material
No code	PCTFE (Standard)
VS	Vespel® *4)

*4) Not available with SH material.

Pressure gauge unit *3)

Code	Unit
No code	psig/bar
MPA	MPa

*3) Pressure gauge unit MPa or psig/bar selectable. However under Japanese regulation, only MPa is available in Japan.

Porting Configuration

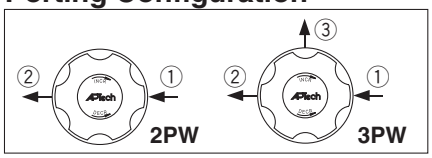

①IN ②OUT ③Gauge port(Outlet)

Specifications

Operating Parameters		SL5201□□A	SL5201	SL5202	SL5206	SL5210
Delivery pressure		100 mm Hg absolute to 10 psig (-88kPa to 0.07 MPa)	0.5 to 10 psig (0.0034 to 0.07 MPa)	0.5 to 30 psig (0.0034 to 0.2 MPa)	1 to 60 psig (0.007 to 0.4 MPa)	1 to 100 psig (0.007 to 0.7 MPa)
Gas		Select compatible materials of construction for the gas				
Source pressure		Vacuum to 150 psig (1.0 MPa)				
Proof pressure (Inlet)		500 psig (3.4 MPa)				
Burst pressure		1000 psig (6.9 MPa)				
Ambient and operating temperature		-40 to 71 °C (No freezing) *1)				
Cv		0.07				
Leak rate	Inboard leakage	2×10^{-11} Pa·m³/sec				
	Outboard leakage	2×10^{-10} Pa·m³/sec *2)				
Across the seat leak		4×10^{-9} Pa·m³/sec *2)				
Surface finish		Ra max 10 µin. (0.25 µm) Option: 7 µin. (0.18 µm), 5 µin. (0.13 µm)				
Connections		Face seal, Tube weld				
Supply pressure effect		0.20 psig (0.0014 MPa) rise in delivery pressure per 20 psig (0.14 MPa) source pressure drop				
Installation		Bottom mount				
Internal volume		0.19 in³ (3.1 cm³)				
Mass		0.45 kg *3)				

*1) -10 to 90 °C for Vespel® seat.
*2) Tested with Helium gas inlet pressure 100 psig (0.7 MPa).
*3) Mass, including individual boxed weight, may vary depending on connections or options.

Option

High flow

Higher flow capacity with internal changes only, no change in external dimensions. Changes from the standard type are:

Option	Other Parameters	SL5201□□A	SL5201	SL5202	SL5206	SL5210
HF	Cv	0.15				
	Supply pressure effect	0.50 psig (0.0035 MPa) rise in delivery pressure per 20 psig (0.14 MPa) source pressure drop				

Wetted Parts Material

Wetted Parts	S	SH
Body	316L SS secondary remelt	
Surface finish	Electropolish + Passivation	
Poppet	316L SS	Hastelloy® C-22
Diaphragm	316L SS	
Seat	PCTFE (Option: Vespel®)	PCTFE

Dimensions

inch (mm)

SL5200

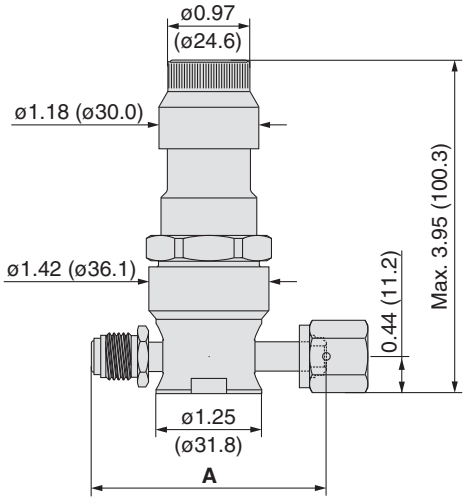

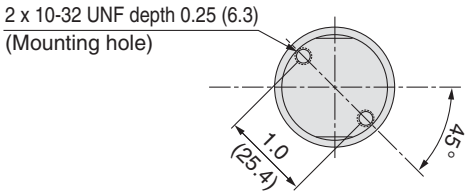

Connections	A	
	inch	(mm)
FV4	2.78	(70.6)
MV4		
TW4	2.12	(53.8)
FV6	3.86	(98.0)
MV6		
TW6	2.65	(67.3)

Flow Characteristics

SL5210HF

Inlet pressure: ---- 100 psig (0.69 MPa) inlet
—— 50 psig (0.34 MPa) inlet

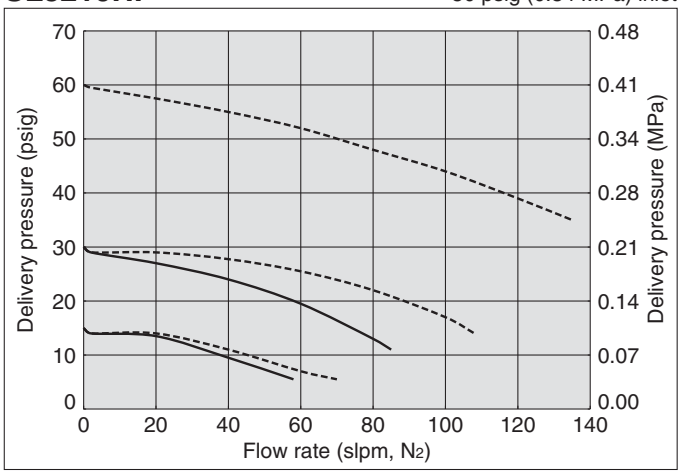

SL5210

Inlet pressure: --- 100 psig (0.69 MPa) ---- 60 psig (0.41 MPa)
—— 30 psig (0.21 MPa)

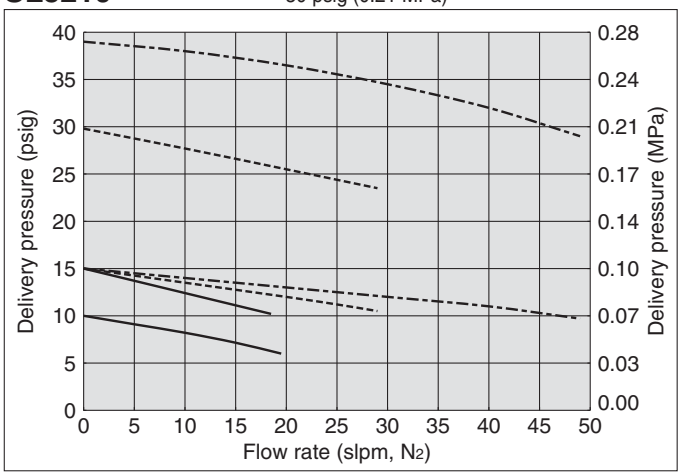

SL5201A

Inlet pressure: 2 psig (14 kPa)
---- High flow option —— Standard

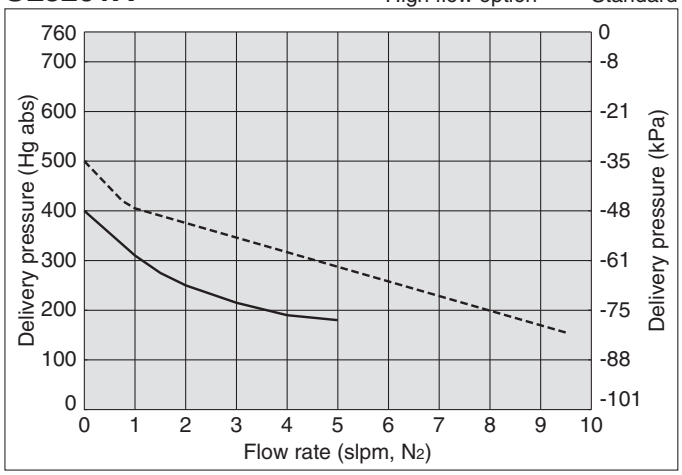

Hastelloy® is a registered trademark of Haynes International.
Vespel® is a registered trademark of DuPont.

Single Stage Regulator for Ultra High Purity | Low flow

Series SL5500

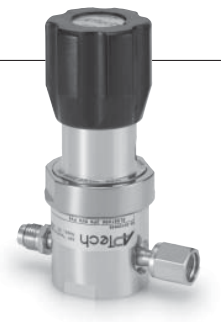

- For UHP gas delivery
- High inlet pressure type: Max. 3500 psig (24.1 MPa)
- Flow capacity to 30 slpm
- Body material: 316L SS secondary remelt
- Hastelloy internals available for corrosion resistance
- Sub-atmospheric pressure delivery option
- Springless design (No poppet spring in the wetted area)

How to Order

Port Number ① ② ③ ④

SL55 02 S M □ 2PW FV4 FV4 □ □ □ □ □

Delivery pressure

Code	Delivery pressure
02	1 to 30 psig (0.007 to 0.2 MPa)
	Sub-atmospheric (A): 100 mm Hg absolute to 30 psig (-88kPa to 0.2 MPa)
06	1 to 60 psig (0.007 to 0.4 MPa)
10	2 to 100 psig (0.014 to 0.7 MPa)

Material

Code	Body	Poppet	Diaphragm
S	316L SS secondary remelt	316L SS	316L SS
SH		Hastelloy® C-22	Hastelloy® C-22

Surface finish

Code	Surface finish Ra max
M	10 µin. (0.25 µm) Standard
V	7 µin. (0.18 µm)
X	5 µin. (0.13 µm)

Range options *1)

Code	Specification
No code	Standard
A	Sub-atmospheric

*1) Only available with SL5502.

Ports

Code	Ports
2PW	2 ports
3PW	3 ports
4PW	4 ports

Connections (Inlet①, Outlet②)

Code	Connections
FV4	1/4 inch face seal (Female)
MV4	1/4 inch face seal (Male)
TW4	1/4 inch tube weld
FV6	3/8 inch face seal (Female)
MV6	3/8 inch face seal (Male)
TW6	3/8 inch tube weld

Gauge port (Inlet③, Outlet④)

Code	Pressure gauge *2) psig/bar unit	Pressure gauge *2) MPa unit
No code	No gauge port	
0	No pressure gauge (Connections: 1/4 inch face seal male)	
V3	-30 in.Hg to 30 psig	-0.1 to 0.2 MPa
L	-30 in.Hg to 60 psig	-0.1 to 0.4 MPa
1	-30 in.Hg to 100 psig	-0.1 to 0.7 MPa
H	-30 in.Hg to 160 psig	-0.1 to 1.1 MPa
2	0 to 200 psig	0 to 1.4 MPa
4	0 to 400 psig	0 to 3 MPa
10	0 to 1000 psig	0 to 7 MPa
40	0 to 4000 psig	0 to 28 MPa

*2) Refer to gauge guide (P.94) for gauge specifications.

Bonnet option

Code	Bonnet
No code	Standard
P	Panel installation *5)

*5) Panel mounting hole: dia. 1.56 inch (39.6 mm).

Seat material

Code	Material
No code	PCTFE (Standard)
VS	Vespel® *4)

*4) Not available with SH material.

Pressure gauge unit *3)

Code	Unit
No code	psig/bar
MPA	MPa

*3) Pressure gauge unit MPa or psig/bar selectable. However under Japanese regulation, only MPa is available in Japan.

Porting Configuration

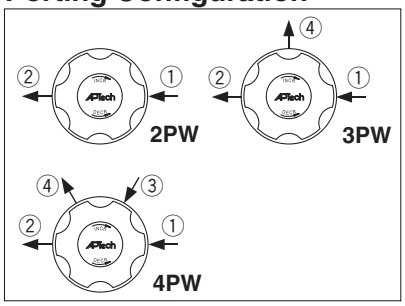

①IN ②OUT
③Gauge port (Inlet)
④Gauge port (Outlet)

Sample Order Number

	Port ①	②	③	④		
SL5502S	2PW	FV4	FV4			
	3PW	FV4	FV4		0	
	3PW	FV4	FV4		1	MPA
	4PW	FV4	FV4	40	1	MPA

Specifications

Operating Parameters		SL5502□□A	SL5502	SL5506	SL5510
Delivery pressure		100 mm Hg absolute to 30 psig (-88 kPa to 0.2 MPa)	1 to 30 psig (0.007 to 0.2 MPa)	1 to 60 psig (0.007 to 0.4 MPa)	2 to 100 psig (0.014 to 0.7 MPa)
Gas		Select compatible materials of construction for the gas			
Source pressure		Vacuum to 3500 psig (24.1 MPa)			
Proof pressure (Inlet)		5000 psig (34.5 MPa)			
Burst pressure		10000 psig (69 MPa)			
Ambient and operating temperature		-40 to 71 °C (No freezing) *1)			
Cv		0.09			
Leak rate	Inboard leakage	2×10^{-11} Pa·m³/sec			
	Outboard leakage	2×10^{-10} Pa·m³/sec *2)			
Across the seat leak		4×10^{-9} Pa·m³/sec *3)			
Surface finish		Ra max 10 µin. (0.25 µm) Option: 7 µin. (0.18 µm), 5 µin. (0.13 µm)			
Bonnet port		NPT 1/8 inch *4)			
Supply pressure effect		0.25 psig (0.0017 MPa) rise in delivery pressure per 100 psig (0.7 MPa) source pressure drop			
Installation		Bottom mount (Option: panel mount)			
Internal volume		0.55 in³ (9 cm³)			
Mass		1.63 kg *5)			

*1) -10 to 90 °C for Vespel® seat.
*2) Tested with Helium gas inlet pressure 1500 psig (10.5 MPa).
*3) Tested with Helium gas inlet pressure 1000 psig (7 MPa).
*4) On panel mount option, bonnet port is not threaded.
*5) Mass, including individual boxed weight, may vary depending on connections or options.

Wetted Parts Material

Wetted Parts	S	SH
Body	316L SS secondary remelt	
Surface finish	Electropolish + Passivation	
Poppet	316L SS	Hastelloy® C-22
Diaphragm	316L SS	Hastelloy® C-22
Nozzle	316L SS	Hastelloy® C-22
Seat	PCTFE (Option: Vespel®)	PCTFE

Dimensions

inch (mm)

SL5500

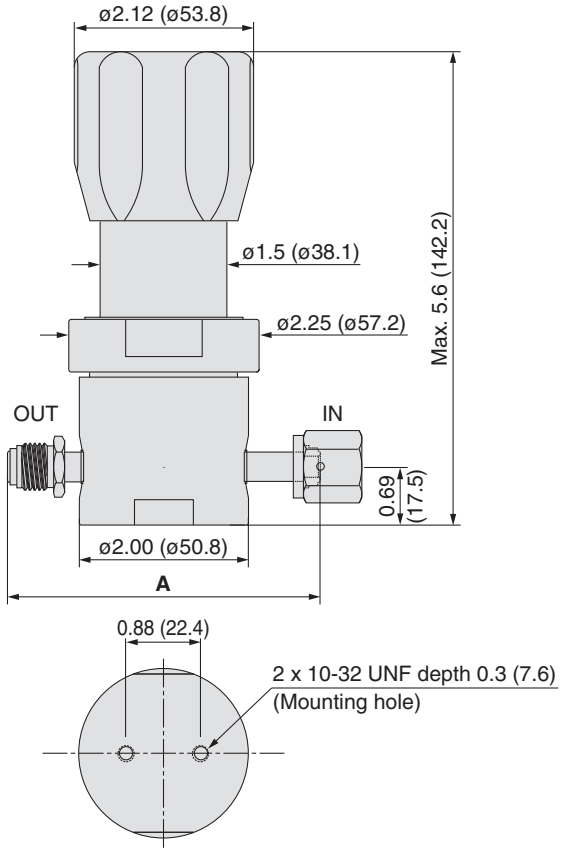

Connections	A	
	inch	(mm)
FV4	3.70	(94.0)
MV4		
TW4	2.96	(75.2)
FV6	4.70	(119.4)
MV6		
TW6	2.96	(75.2)

Flow Characteristics

SL5500 Inlet pressure: ---- 80 psig (0.55 MPa) —— 50 psig (0.34 MPa)

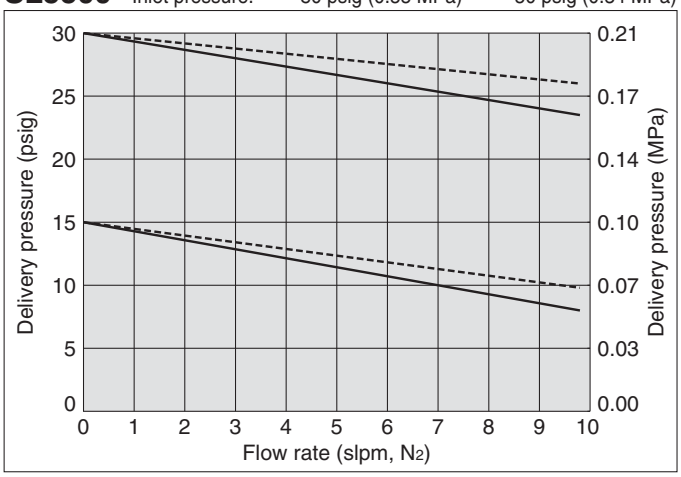

SL5500 Inlet pressure: ---- 1000 to 3000 psig (6.9 to 20.7 MPa) —— 500 psig (3.4 MPa)

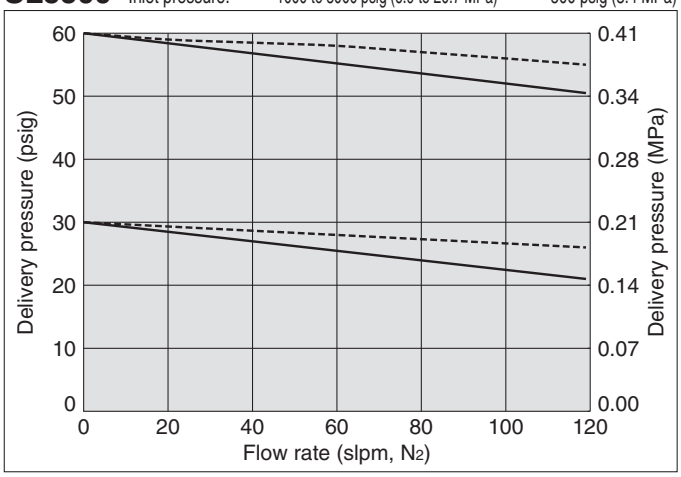

Hastelloy® is a registered trademark of Haynes International.
Vespel® is a registered trademark of DuPont.

Single Stage Regulator for Ultra High Purity | Intermediate flow

Series SL5400

- For UHP gas delivery
- Body material: 316L SS secondary remelt
- Hastelloy internals available for corrosion resistance
- Springless design (No poppet spring in the wetted area)

How to Order

Port Number ① ② ③ ④

SL54 02 S M 2PW FV4 FV4 □ □ □ □ □

Delivery pressure

Code	Delivery pressure
02	1 to 30 psig (0.007 to 0.2 MPa)
06	1 to 60 psig (0.007 to 0.4 MPa)
10	2 to 100 psig (0.014 to 0.7 MPa)

Material

Code	Body	Poppet	Diaphragm
S	316L SS secondary remelt	316L SS	316L SS
SH		Hastelloy® C-22	

Surface finish

Code	Surface finish Ra max
M	10 µin. (0.25 µm) Standard
V	7 µin. (0.18 µm)
X	5 µin. (0.13 µm)

Ports

Code	Ports
2PW	2 ports
3PW	3 ports
4PW	4 ports

Connections (Inlet①, Outlet②)

Code	Connections
FV4	1/4 inch face seal (Female)
MV4	1/4 inch face seal (Male)
TW4	1/4 inch tube weld
FV6	3/8 inch face seal (Female)
MV6	3/8 inch face seal (Male)
TW6	3/8 inch tube weld
FV8	1/2 inch face seal (Female)
MV8	1/2 inch face seal (Male)
TW8	1/2 inch tube weld

Gauge port (Inlet③, Outlet④)

Code	Pressure gauge *1)	
	psig/bar unit	MPa unit
No code	No gauge port	
0	No pressure gauge (Connections: 1/4 inch face seal male)	
V3	-30 in.Hg to 30 psig	-0.1 to 0.2 MPa
L	-30 in.Hg to 60 psig	-0.1 to 0.4 MPa
1	-30 in.Hg to 100 psig	-0.1 to 0.7 MPa
2	0 to 200 psig	0 to 1.4 MPa
4	0 to 400 psig	0 to 3 MPa
10	0 to 1000 psig	0 to 7 MPa

*1) Other range available. Refer to gauge guide (P.94).

Bonnet option

Code	Bonnet
No code	Standard
P	Panel installation *4)

*4) Panel mounting hole: dia. 1.56 inch (39.6 mm).

Seat material

Code	Material
No code	PCTFE (Standard)
VS	Vespel® *3)

*3) Not available with SH material.

Pressure gauge unit *2)

Code	Unit
No code	psig/bar
MPA	MPa

*2) Pressure gauge unit MPa or psig/bar selectable. However under Japanese regulation, only MPa is available in Japan.

Porting Configuration

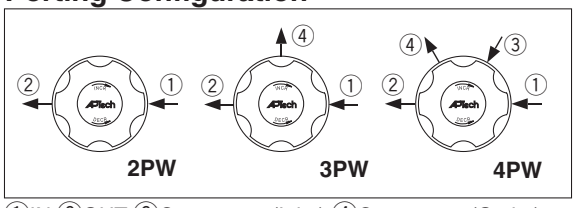

①IN ②OUT ③Gauge port (Inlet) ④Gauge port (Outlet)

Sample Order Number

	Port ①	②	③	④		
SL5406S	2PW	FV4	FV4			
	3PW	FV4	FV4		0	
	3PW	FV4	FV4		L	MPA
	4PW	FV4	FV4	10	L	MPA

Specifications

Operating Parameters		SL5402	SL5406	SL5410
Delivery pressure		1 to 30 psig (0.007 to 0.2 MPa)	1 to 60 psig (0.007 to 0.4 MPa)	2 to 100 psig (0.014 to 0.7 MPa)
Gas		Select compatible materials of construction for the gas		
Source pressure		Vacuum to 1000 psig (6.9 MPa)		
Proof pressure (Inlet)		3000 psig (20.7 MPa)		
Burst pressure		6000 psig (41.4 MPa)		
Ambient and operating temperature		-40 to 71 °C (No freezing) *1)		
Cv		0.23		
Leak rate	Inboard leakage	2×10^{-11} Pa·m³/sec		
	Outboard leakage	2×10^{-10} Pa·m³/sec *2)		
Across the seat leak		4×10^{-9} Pa·m³/sec *2)		
Surface finish		Ra max 10 µin. (0.25 µm) Option: 7 µin. (0.18 µm), 5 µin. (0.13 µm)		
Connections		Face seal, Tube weld		
Bonnet port		NPT 1/8 inch *3)		
Supply pressure effect		1.6 psig (0.011 MPa) rise in delivery pressure per 100 psig (0.7 MPa) source pressure drop		
Installation		Bottom mount (Option: panel mount)		
Internal volume		1.2 in³ (19.7 cm³)		
Mass		1.91 kg *4)		

*1) -10 to 90 °C for Vespel® seat.
*2) Tested with Helium gas inlet pressure 1000 psig (7 MPa).
*3) On panel mount option, bonnet port is not threaded.
*4) Mass, including individual boxed weight, may vary depending on connections or options.

Wetted Parts Material

Wetted Parts	S	SH
Body	316L SS secondary remelt	
Surface finish	Electropolish + Passivation	
Poppet	316L SS	Hastelloy® C-22
Diaphragm	316L SS	
Nozzle	316L SS	
Seat	PCTFE (Option: Vespel®)	PCTFE

Dimensions

inch (mm)

SL5400

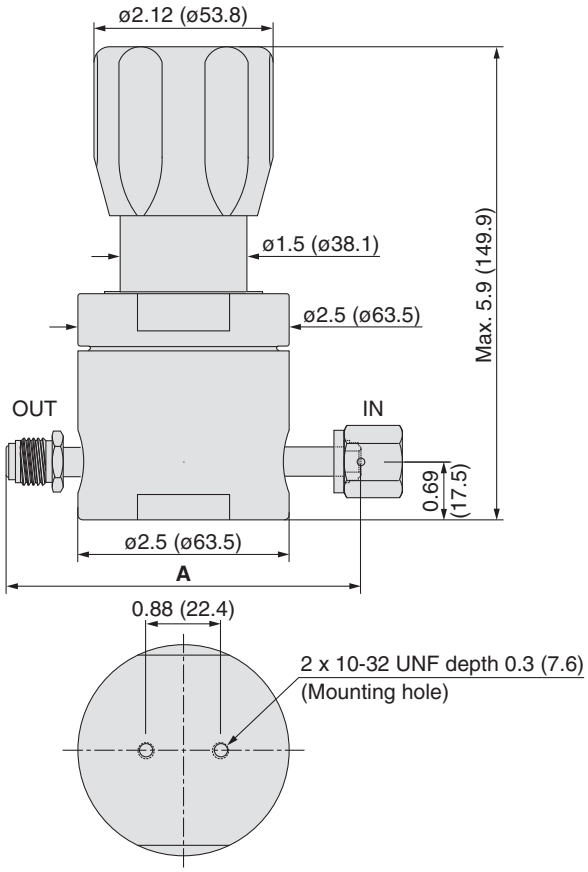

Connections	A	
	inch	(mm)
FV4	4.30	(109.2)
MV4		
TW4	3.46	(87.9)
FV6	5.22	(132.6)
MV6		
TW6	4.00	(101.6)
FV8	5.22	(132.6)
MV8		
TW8	4.34	(110.2)

Flow Characteristics

SL5400 Inlet pressure: ---- 80 psig (0.55 MPa) —— 50 psig (0.34 MPa)

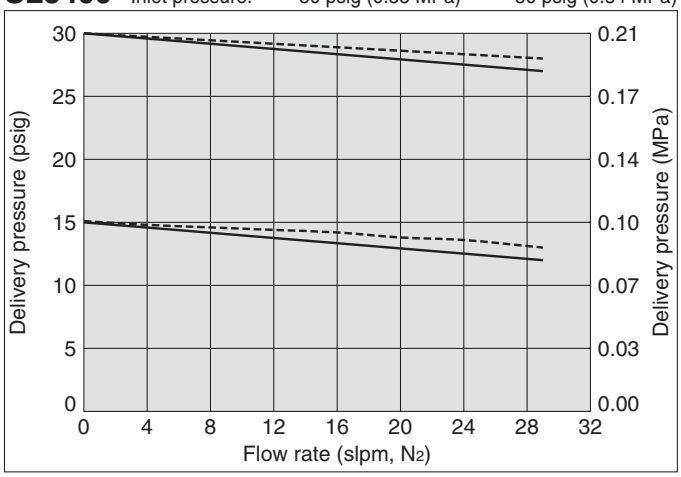

SL5400 Inlet pressure: ---- 1000 psig (6.9 MPa) —— 500 psig (3.4 MPa)

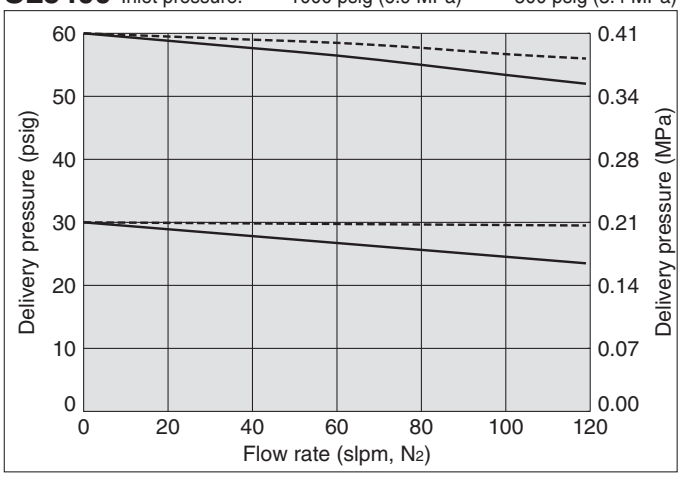

Hastelloy® is a registered trademark of Haynes International.
Vespel® is a registered trademark of DuPont.

Single Stage Regulator for Ultra High Purity | Intermediate flow

Series SL5800

- For UHP gas delivery
- Inlet pressure: Max. 300 psig (2.1 MPa)
- Flow capacity to 200 slpm
- Body material: 316L SS secondary remelt
- Springless design (No poppet spring in the wetted area)

How to Order

SL58 02 S M 2PW FV4 FV4 ☐ ☐ ☐ ☐ ☐

Port Number: ① ② ③ ④

Delivery pressure

Code	Delivery pressure
02	1 to 30 psig (0.007 to 0.2 MPa)
06	1 to 60 psig (0.007 to 0.4 MPa)
10	2 to 100 psig (0.014 to 0.7 MPa)

Material

Code	Body	Poppet	Diaphragm
S	316L SS secondary remelt	316L SS	316L SS

Surface finish

Code	Surface finish Ra max
M	10 µin. (0.25 µm) Standard
V	7 µin. (0.18 µm)
X	5 µin. (0.13 µm)

Ports

Code	Ports
2PW	2 ports
3PW	3 ports
4PW	4 ports

Connections (Inlet①, Outlet②)

Code	Connections
FV4	1/4 inch face seal (Female)
MV4	1/4 inch face seal (Male)
TW4	1/4 inch tube weld
FV6	3/8 inch face seal (Female)
MV6	3/8 inch face seal (Male)
TW6	3/8 inch tube weld
FV8	1/2 inch face seal (Female)
MV8	1/2 inch face seal (Male)
TW8	1/2 inch tube weld

Gauge port (Inlet③, Outlet④)

Code	Pressure gauge *1)	
	psig/bar unit	MPa unit
No code	No gauge port	
0	No pressure gauge (Connections: 1/4 inch face seal male)	
V3	-30 in.Hg to 30 psig	-0.1 to 0.2 MPa
L	-30 in.Hg to 60 psig	-0.1 to 0.4 MPa
1	-30 in.Hg to 100 psig	-0.1 to 0.7 MPa
H	-30 in.Hg to 160 psig	-0.1 to 1.1 MPa
2	0 to 200 psig	0 to 1.4 MPa
4	0 to 400 psig	0 to 3 MPa

*1) Other range available. Refer to gauge guide (P.94).

Bonnet option

Code	Bonnet
No code	Standard
P	Panel installation *3)

*3) Panel mounting hole: dia. 1.56 inch (39.6 mm).

Seat material

Code	Material
No code	PCTFE (Standard)
VS	Vespel®

Pressure gauge unit *2)

Code	Unit
No code	psig/bar
MPA	MPa

*2) Pressure gauge unit MPa or psig/bar selectable. However under Japan's regulation, only MPa is available in Japan.

Porting Configuration

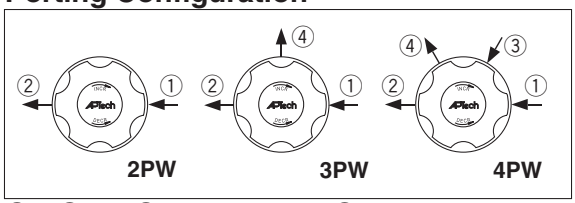

①IN ②OUT ③Gauge port (Inlet) ④Gauge port (Outlet)

Sample Order Number

	Port ①	②	③	④		
SL5802S	2PW	FV4	FV4			
	3PW	FV4	FV4		0	
	3PW	FV4	FV4		V3	MPA
	4PW	FV4	FV4	1	V3	MPA

Specifications

Operating Parameters		SL5802	SL5806	SL5810
Delivery pressure		1 to 30 psig (0.007 to 0.2 MPa)	1 to 60 psig (0.007 to 0.4 MPa)	2 to 100 psig (0.014 to 0.7 MPa)
Gas		Select compatible materials of construction for the gas		
Source pressure		Vacuum to 300 psig (2.1 MPa)		
Proof pressure (Inlet)		2000 psig (13.8 MPa)		
Burst pressure		4000 psig (27.6 MPa)		
Ambient and operating temperature		-40 to 71 °C (No freezing) *1)		
Cv		0.4		
Leak rate	Inboard leakage	2×10^{-11} Pa·m³/sec		
	Outboard leakage	2×10^{-10} Pa·m³/sec *2)		
Across the seat leak		4×10^{-9} Pa·m³/sec *3)		
Surface finish		Ra max 10 µin. (0.25 µm) Option: 7 µin. (0.18 µm), 5 µin. (0.13 µm)		
Connections		Face seal, Tube weld		
Bonnet port		NPT 1/8 inch *4)		
Supply pressure effect		5 psig (0.035 MPa) rise in delivery pressure per 100 psig (0.7 MPa) source pressure drop		
Installation		Bottom mount (Option: panel mount)		
Internal volume		1.2 in³ (19.7 cm³)		
Mass		1.91 kg *5)		

*1) -10 to 90 °C for Vespel® seat.
*2) Tested with Helium gas inlet pressure 300 psig (2.1 MPa).
*3) Tested with Helium gas inlet pressure 100 psig (0.7 MPa).
*4) On panel mount option, bonnet port is not threaded.
*5) Mass, including individual boxed weight, may vary depending on connections or options.

Wetted Parts Material

Wetted Parts	S
Body	316L SS secondary remelt
Surface finish	Electropolish + Passivation
Poppet	316L SS
Diaphragm	316L SS
Nozzle	316L SS
Seat	PCTFE (Option: Vespel®)

Dimensions

inch (mm)

SL5800

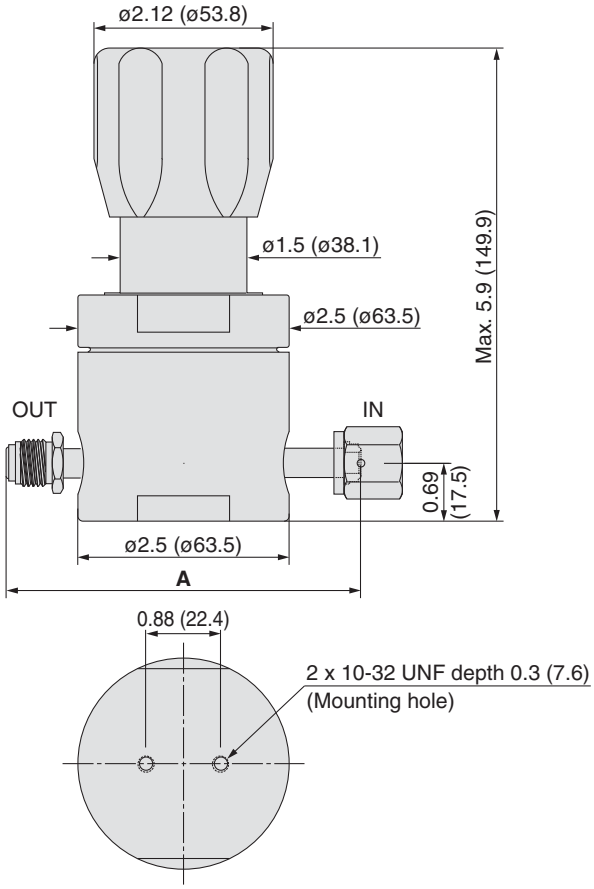

Connections	A	
	inch	(mm)
FV4	4.30	(109.2)
MV4		
TW4	3.46	(87.9)
FV6	5.22	(132.6)
MV6		
TW6	4.00	(101.6)
FV8	5.22	(132.6)
MV8		
TW8	4.34	(110.2)

Flow Characteristics

SL5800

Inlet pressure: 30 psig (0.21 MPa)
1/2 inch connections *)

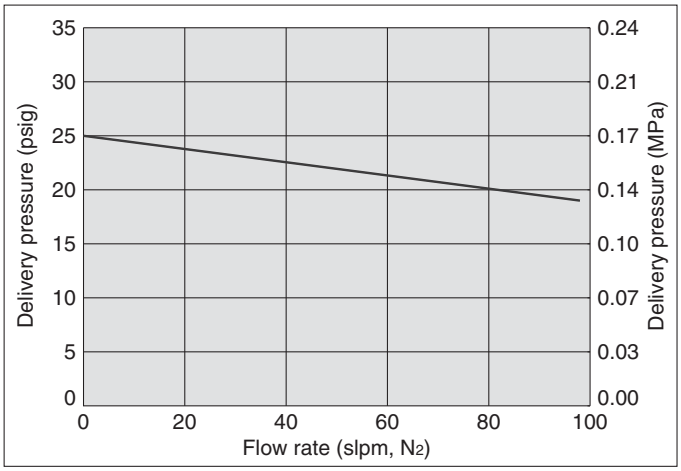

SL5800

Inlet pressure: 100 psig (0.69 MPa)
1/2 inch connections *)

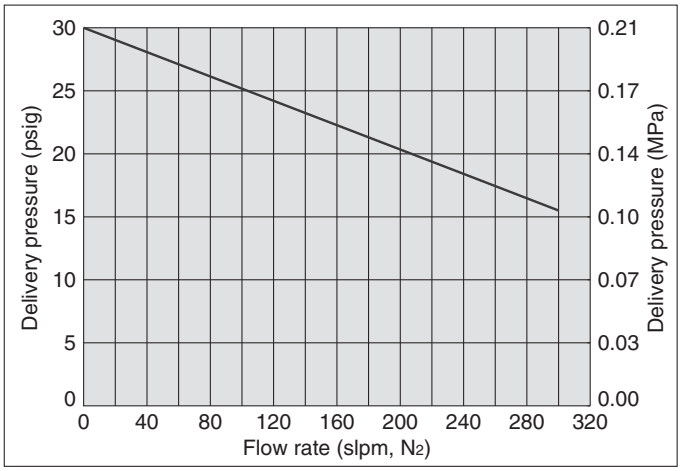

*) If connection size differs, flow characteristics also differ.

Vespel® is a registered trademark of DuPont.

Single Stage Regulator for Ultra High Purity

Low to intermediate flow

Series AZ1000

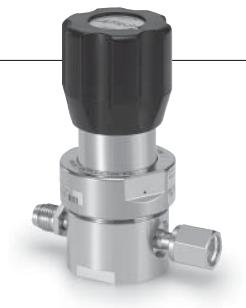

- **For UHP gas delivery**
- **High inlet pressure type: Max. 3500 psig (24.1 MPa)**
- **Flow capacity Standard: to 30 slpm**
  HF (option): to 120 slpm
- **Body material: 316L SS**
- **Hastelloy internals available for corrosion resistance**

How to Order

Port Number ① ② ③ ④

AZ10 | 01 | S | | 2PW | FV4 | FV4 | | | | | | |

Delivery pressure

Code	Delivery pressure
01	1 to 10 psig (0.007 to 0.07 MPa)
02	1 to 30 psig (0.007 to 0.2 MPa)
06	2 to 60 psig (0.014 to 0.4 MPa)
10	2 to 100 psig (0.014 to 0.7 MPa)
15	5 to 150 psig (0.034 to 1.0 MPa)

Material

Code	Body	Poppet	Diaphragm	Nozzle
S	316L SS	316L SS	316L SS	316L SS
SHP		Hastelloy® C-22	Hastelloy® C-22	

Surface finish

Code	Surface finish Ra
No code	10 µin. (0.25 µm) Standard
Q	25 µin. (0.62 µm)

Ports

Code	Ports
2PW	2 ports
3PW	3 ports
4PW	4 ports

Porting Configuration

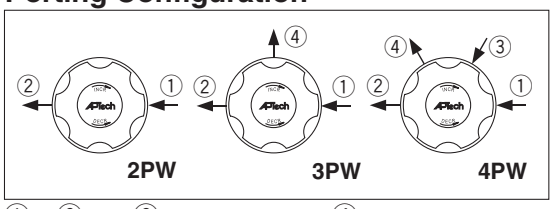

①IN ②OUT ③Gauge port (Inlet) ④Gauge port (Outlet)

Connections (Inlet①, Outlet②)

Code	Connections
FV4	1/4 inch face seal (Female)
MV4	1/4 inch face seal (Male)
FV6	3/8 inch face seal (Female)
MV6	3/8 inch face seal (Male)
TW6	3/8 inch tube weld

Gauge port (Inlet③, Outlet④)

Code	Pressure gauge *1)	
	psig/bar unit	MPa unit
No code	No gauge port	
0	No pressure gauge (Connections: 1/4 inch face seal male)	
V3	-30 in.Hg to 30 psig	-0.1 to 0.2 MPa
L	-30 in.Hg to 60 psig	-0.1 to 0.4 MPa
1	-30 in.Hg to 100 psig	-0.1 to 0.7 MPa
H	-30 in.Hg to 160 psig	-0.1 to 1.1 MPa
2	0 to 200 psig	0 to 1.4 MPa
4	0 to 400 psig	0 to 3 MPa
10	0 to 1000 psig	0 to 7 MPa
40	0 to 4000 psig	0 to 28 MPa

*1) Refer to gauge guide (P.94) for gauge specifications.

Sample Order Number

	Port ①	②	③	④		
AZ1001S	2PW	FV4	FV4			
	3PW	FV4	FV4		V3	MPA
	4PW	FV4	FV4	1	V3	MPA

Bonnet option

Code	Bonnet
No code	Standard
P	Panel installation *6)
BP	Bonnet port (NPT 1/8 inch)

*6) Panel mounting hole: dia. 1.56 inch (39.6 mm).

Option

Code	Specification
No code	Standard (Cv: 0.09)
HF	High flow (Cv: 0.15)

Seat material

Code	Material
No code	PCTFE (Standard)
VS	Vespel® *3)
TF	PTFE *4) *5)

*3) Not available with SHP material.
*4) PTFE recommended for applications such as within a process tool.
*5) Source pressure rating is limited to 300 psig (2.1 MPa) or less.

Pressure gauge unit *2)

Code	Unit
No code	psig/bar
MPA	MPa

*2) Pressure gauge unit MPa or psig/bar selectable. However under Japanese regulation, only MPa is available in Japan.

Specifications

Operating Parameters		AZ1001	AZ1002	AZ1006	AZ1010	AZ1015
Delivery pressure		1 to 10 psig (0.007 to 0.07 MPa)	1 to 30 psig (0.007 to 0.2 MPa)	2 to 60 psig (0.014 to 0.4 MPa)	2 to 100 psig (0.014 to 0.7 MPa)	5 to 150 psig (0.034 to 1.0 MPa)
Gas		Select compatible materials of construction for the gas				
Source pressure		Vacuum to 300 psig (2.1 MPa)	Vacuum to 3500 psig (24.1 MPa) *1)			
Proof pressure (Inlet)		5000 psig (34.5 MPa)				
Burst pressure		10000 psig (69 MPa)				
Ambient and operating temperature		-40 to 71 °C (No freezing) *2)				
Cv		0.09				
Leak rate	**Inboard leakage**	2×10^{-11} Pa·m³/sec				
	Outboard leakage	2×10^{-10} Pa·m³/sec *3)				
Across the seat leak		4×10^{-9} Pa·m³/sec *4)				
Surface finish		Ra 10 µin. (0.25 µm) Option: 25 µin. (0.62 µm)				
Connections		Face seal, Tube weld				
Supply pressure effect		0.38 pisg (0.0026 MPa) rise in delivery pressure per 100 psig (0.7 MPa) source pressure drop				
Installation		Bottom mount (Option: panel mount)				
Internal volume		0.49 in³ (8 cm³)				
Mass		1.25 kg *5)				

*1) Max 300 psig (2.1MPa) for PTFE seat.
*2) -10 to 90 °C for Vespel® seat.
*3) Tested with Helium gas inlet pressure 1500 psig (10.5 MPa).
*4) Tested with Helium gas inlet pressure 1000 psig (7 MPa).
*5) Mass, including individual boxed weight, may vary depending on connections or options.

Option

High flow

Higher flow capacity with internal changes only, no change in external dimensions. Changes from the standard type are:

Option	Other Parameters	AZ1001	AZ1002	AZ1006	AZ1010	AZ1015
HF	Cv	0.15				
	Supply pressure effect	0.75 psig (0.0052 MPa) rise in delivery pressure per 100 psig (0.7 MPa) source pressure drop				

Wetted Parts Material

Wetted Parts	S	SHP
Body	316L SS	
Surface finish	Electropolish + Passivation	
Poppet	316L SS	Hastelloy® C-22
Diaphragm	316L SS	Hastelloy® C-22
Nozzle	316L SS	
Seat	PCTFE (Option: Vespel®, PTFE)	PCTFE (Option: PTFE)

Dimensions

inch (mm)

AZ1000

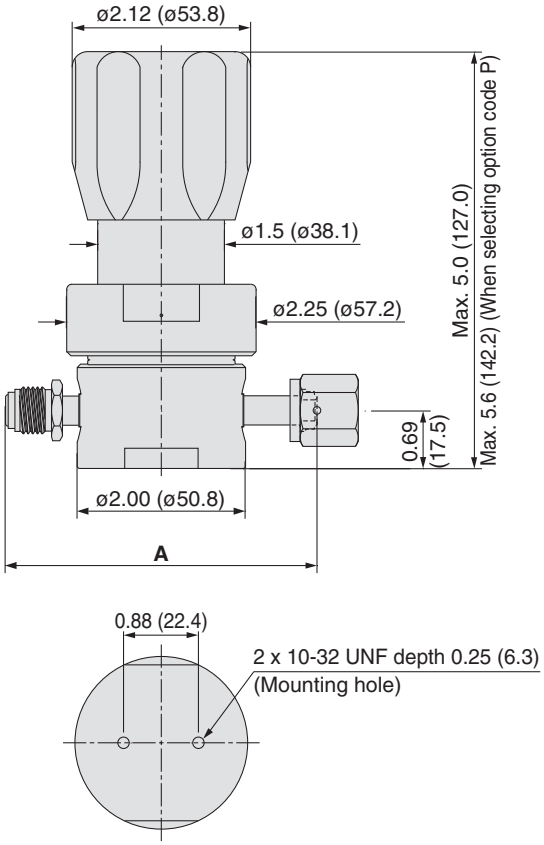

Connections	A	
	inch	(mm)
FV4	3.70	(94.0)
MV4		
FV6	4.70	(119.4)
MV6		
TW6	2.96	(75.2)

Flow Characteristics

AZ1000HF

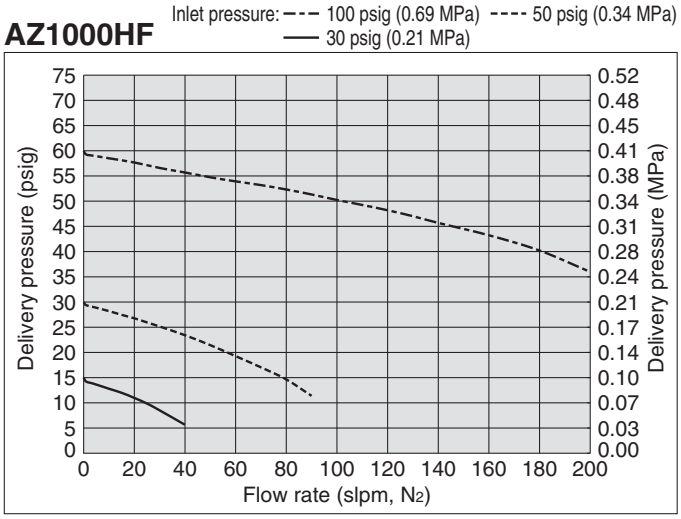

AZ1000

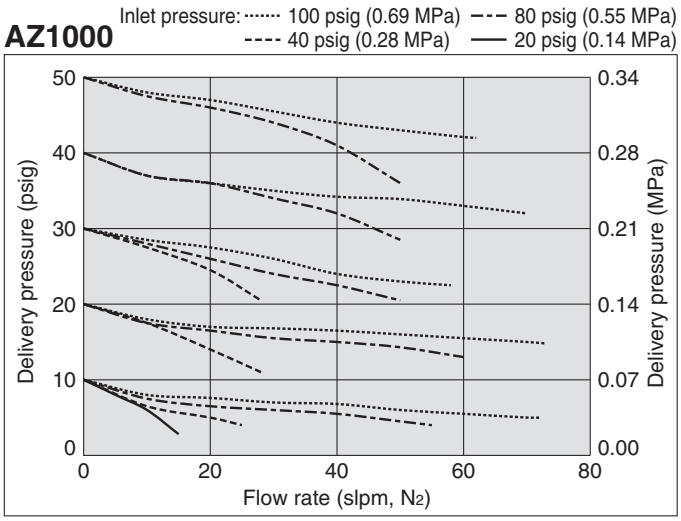

Hastelloy® is a registered trademark of Haynes International.
Vespel® is a registered trademark of DuPont.

Single Stage Regulator for Ultra High Purity | Low flow (Tied-diaphragm)

Series AZ1500

- For UHP gas delivery
- High inlet pressure type: Max. 3500 psig (24.1 MPa)
- Body material: 316L SS
- Hastelloy internals available for corrosion resistance
- Tied-diaphragm design

How to Order

Port Number: ① ② ③ ④

AZ15 | 02 | S | | 2PW | FV4 | FV4 | | | | | |

Delivery pressure

Code	Delivery pressure
02	1 to 30 psig (0.007 to 0.2 MPa)
06	2 to 60 psig (0.014 to 0.4 MPa)
10	2 to 100 psig (0.014 to 0.7 MPa)
15	5 to 150 psig (0.034 to 1.0 MPa)

Material

Code	Body	Poppet	Diaphragm	Nozzle
S	316L SS	316L SS	316L SS	316L SS
SHP		Hastelloy® C-22	Hastelloy® C-22	

Surface finish

Code	Surface finish Ra
No code	10 µin. (0.25 µm) Standard
Q	25 µin. (0.62 µm)

Ports

Code	Ports
2PW	2 ports
3PW	3 ports
4PW	4 ports

Connections (Inlet①, Outlet②)

Code	Connections
FV4	1/4 inch face seal (Female)
MV4	1/4 inch face seal (Male)
FV6	3/8 inch face seal (Female)
MV6	3/8 inch face seal (Male)
TW6	3/8 inch tube weld

Gauge port (Inlet③, Outlet④)

Code	Pressure gauge *1)	
	psig/bar unit	MPa unit
No code	No gauge port	
0	No pressure gauge (Connections: 1/4 inch face seal male)	
V3	-30 in.Hg to 30 psig	-0.1 to 0.2 MPa
L	-30 in.Hg to 60 psig	-0.1 to 0.4 MPa
1	-30 in.Hg to 100 psig	-0.1 to 0.7 MPa
H	-30 in.Hg to 160 psig	-0.1 to 1.1 MPa
2	0 to 200 psig	0 to 1.4 MPa
4	0 to 400 psig	0 to 3 MPa
10	0 to 1000 psig	0 to 7 MPa
40	0 to 4000 psig	0 to 28 MPa

*1) Refer to gauge guide (P.94) for gauge specifications.

Bonnet option

Code	Bonnet
No code	Standard
P	Panel installation *4)
BP	Bonnet port (NPT 1/8 inch)

*4) Panel mounting hole: dia. 1.56 inch (39.6 mm).

Seat material

Code	Material
No code	PCTFE(Standard)
VS	Vespel® *3)

*3) Not available with SHP material.

Pressure gauge unit *2)

Code	Unit
No code	psig/bar
MPA	MPa

*2) Pressure gauge unit MPa or psig/bar selectable. However under Japanese regulation, only MPa is available in Japan.

Porting Configuration

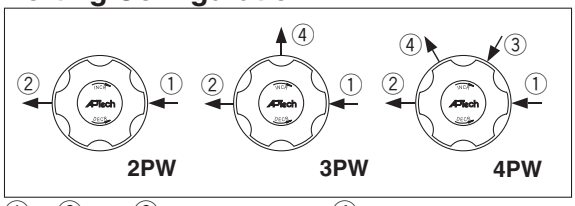

①IN ②OUT ③Gauge port (Inlet) ④Gauge port (Outlet)

Sample Order Number

	Port ①	②	③	④		
AZ1510S	2PW	FV4	FV4			
	3PW	FV4	FV4		0	
	3PW	FV4	FV4		1	MPA
	4PW	FV4	FV4	40	1	MPA

Specifications

Operating Parameters		AZ1502	AZ1506	AZ1510	AZ1515
Delivery pressure		1 to 30 psig (0.007 to 0.2 MPa)	2 to 60 psig (0.014 to 0.4 MPa)	2 to 100 psig (0.014 to 0.7 MPa)	5 to 150 psig (0.034 to 1.0 MPa)
Gas		Select compatible materials of construction for the gas			
Source pressure		Vacuum to 3500 psig (24.1 MPa)			
Proof pressure (Inlet)		5000 psig (34.5 MPa)			
Burst pressure		10000 psig (69 MPa)			
Ambient and operating temperature		-40 to 71 °C (No freezing) *1)			
Cv		0.09			
Leak rate	Inboard leakage	2×10^{-11} Pa·m³/sec			
	Outboard leakage	2×10^{-10} Pa·m³/sec *2)			
Across the seat leak		4×10^{-9} Pa·m³/sec *3)			
Surface finish		Ra 10 µin.(0.25 µm) Option: 25 µin.(0.62 µm)			
Connections		Face seal, Tube weld			
Supply pressure effect		0.41 psig (0.0028 MPa) rise in delivery pressure per 100 psig (0.7 MPa) source pressure drop			
Installation		Bottom mount (Option: panel mount)			
Internal volume		0.51 in³ (8.4 cm³)			
Mass		1.27 kg *4)			

*1) -10 to 90 °C for Vespel® seat.
*2) Tested with Helium gas inlet pressure 1500 psig (10.5 MPa).
*3) Tested with Helium gas inlet pressure 1000 psig (7 MPa).
*4) Mass, including individual boxed weight, may vary depending on connections or options.

Wetted Parts Material

Wetted Parts	S	SHP
Body	316L SS	
Surface finish	Electropolish + Passivation	
Poppet	316L SS	Hastelloy® C-22
Diaphragm	316L SS	Hastelloy® C-22
Nozzle	316L SS	
Seat	PCTFE (Option: Vespel®)	PCTFE

Dimensions

inch (mm)

AZ1500

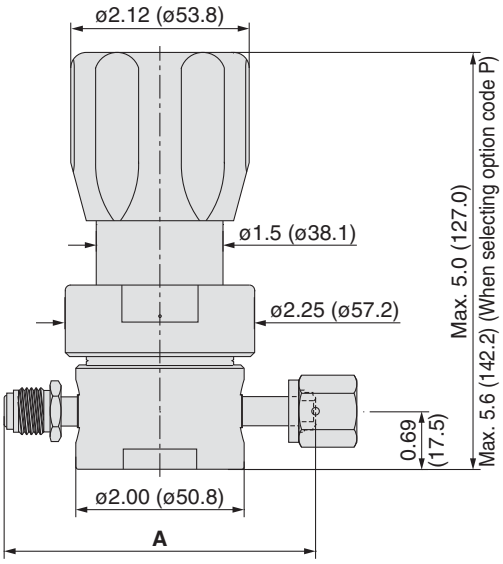

Connections	A	
	inch	(mm)
FV4	3.70	(94.0)
MV4		
FV6	4.70	(119.4)
MV6		
TW6	2.96	(75.2)

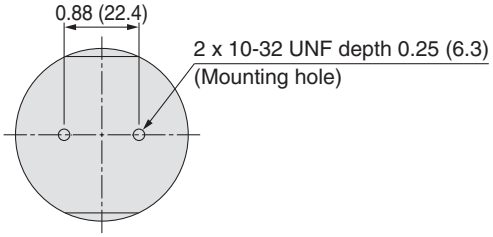

Flow Characteristics

AZ1500

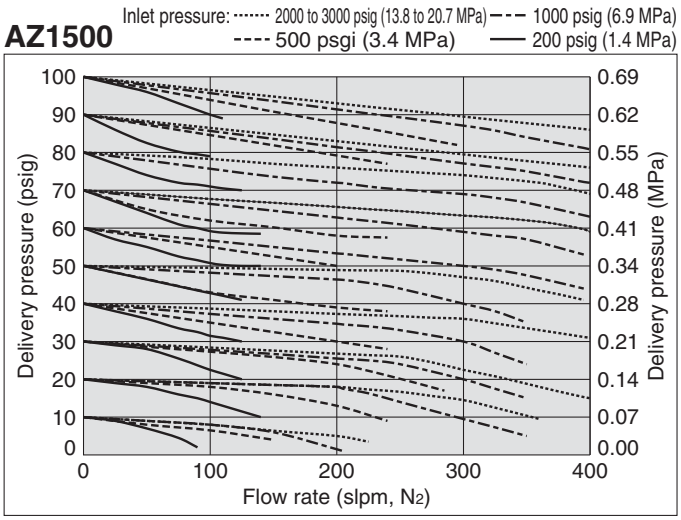

AZ1500

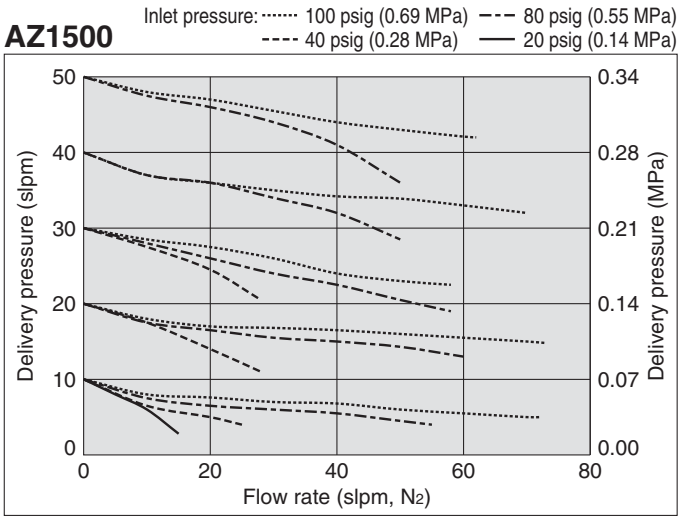

Hastelloy® is a registered trademark of Haynes International.
Vespel® is a registered trademark of DuPont.

Single Stage Regulator for Ultra High Purity

Intermediate flow (Tied-diaphragm)

Series AZ1400T

- For UHP gas delivery
- High inlet pressure type Standard: Max. 2300 psig (15.9 MPa)
  HR (option): Max. 3000 psig (20.7 MPa)
- Flow capacity to 400 slpm
- Body material: 316L SS
- Hastelloy internals standard
- Sub-atmospheric pressure delivery option
- Tied-diaphragm design

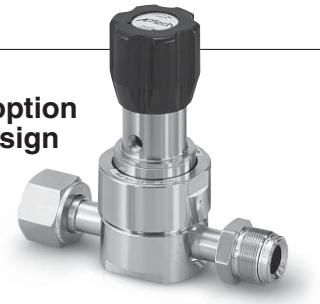

How to Order

AZ14 [02] T S [ ] [ ] [2PW] [FV4] [FV4] [ ] [ ] [ ] [ ] [ ] [ ]

Port Number: ① ② ③ ④

Delivery pressure

Code	Delivery pressure
02	1 to 30 psig (0.007 to 0.2 MPa)
	Sub-atmospheric (A): 100 mm Hg absolute to 30 psig (-88kPa to 0.2 MPa)
06	2 to 60 psig (0.014 to 0.4 MPa)
10	2 to 100 psig (0.014 to 0.7 MPa)
15	5 to 150 psig (0.034 to 1.0 MPa)

Material

Code	Body	Poppet	Diaphragm
S	316L SS	Hastelloy® C-22	Hastelloy® C-22

Surface finish

Code	Surface finish Ra
No code	10 µin. (0.25 µm) Standard
Q	25 µin. (0.62 µm)

Range options *1)

Code	Specification
No code	Standard
A	Sub-atmospheric

*1) Only available with AZ1402T.

Ports

Code	Ports
2PW	2 ports
3PW	3 ports
4PW	4 ports

Porting Configuration

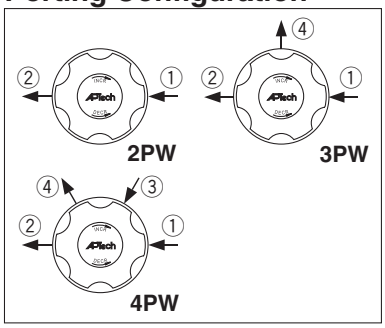

①IN
②OUT
③Gauge port (Inlet)
④Gauge port (Outlet)

Connections (Inlet①, Outlet②)

Code	Connections
FV4	1/4 inch face seal (Female)
MV4	1/4 inch face seal (Male)
FV6	3/8 inch face seal (Female)
MV6	3/8 inch face seal (Male)
TW6	3/8 inch tube weld
FV8	1/2 inch face seal (Female)
MV8	1/2 inch face seal (Male)
TW8	1/2 inch tube weld

Gauge port (Inlet③, Outlet④)

Code	Pressure gauge *2) psig/bar unit	Pressure gauge *2) MPa unit
No code	No gauge port	
0	No pressure gauge (Connections: 1/4 inch face seal male)	
V3	-30 in.Hg to 30 psig	-0.1 to 0.2 MPa
L	-30 in.Hg to 60 psig	-0.1 to 0.4 MPa
1	-30 in.Hg to 100 psig	-0.1 to 0.7 MPa
H	-30 in.Hg to 160 psig	-0.1 to 1.1 MPa
2	0 to 200 psig	0 to 1.4 MPa
4	0 to 400 psig	0 to 3 MPa
10	0 to 1000 psig	0 to 7 MPa
40	0 to 4000 psig	0 to 28 MPa

*2) Refer to gauge guide (P.94) for gauge specifications.

Sample Order Number

	Port ①	②	③	④		
AZ1402TS	2PW	FV4	FV4			
	3PW	FV4	FV4		0	
	3PW	FV4	FV4		1	MPA
	4PW	FV4	FV4	40	1	MPA

Bonnet option

Code	Bonnet
No code	Standard
P	Panel installation*5)
BP	Bonnet port (1/8inch)

*5) Panel mounting hole: dia. 1.56 inch (39.6 mm).

Option

Code	Specification
No code	Standard
HR	High inlet pressure (Max. inlet pressure 3000 psig (20.7 MPa)) *4)

*4) Not available with AZ1402T and AZ1406T.

Seat material

Code	Material
No code	PCTFE (Standard)
VS	Vespel®

Pressure gauge unit *3)

Code	Unit
No code	psig/bar
MPA	MPa

*3) Pressure gauge unit MPa or psig/bar selectable. However under Japanese regulation, only MPa is available in Japan.

Specifications

Operating Parameters		AZ1402T□□A	AZ1402T	AZ1406T	AZ1410T	AZ1415T
Delivery pressure		100 mm Hg absolute to 30 psig (-88 kPa to 0.2 MPa)	1 to 30 psig (0.007 to 0.2 MPa)	2 to 60 psig (0.014 to 0.4 MPa)	2 to 100 psig (0.014 to 0.7 MPa)	5 to 150 psig (0.034 to 1.0 MPa) (Source pressure 1000psig or less) *1)
Gas		Select compatible materials of construction for the gas				
Source pressure		Vacuum to 300 psig (2.1 MPa)	Vacuum to 2300 psig (15.9 MPa)			
Proof pressure (Inlet)		4000 psig (27.6 MPa)				
Burst pressure		8000 psig (55.2 MPa)				
Ambient and operating temperature		-40 to 71 °C (No freezing) *2)				
Cv		0.45				
Leak rate	Inboard leakage	2×10^{-11} Pa·m³/sec				
	Outboard leakage	2×10^{-10} Pa·m³/sec *3)				
Across the seat leak		4×10^{-9} Pa·m³/sec *4)				
Surface finish		Ra 10 µin. (0.25 µm) Option: 25 µin. (0.62 µm)				
Connection		Face seal, Tube weld				
Supply pressure effect		1.6 psig (0.011 MPa) rise in delivery pressure per 100 psig (0.7 MPa) source pressure drop				
Installation		Bottom mount (Option: panel mount)				
Internal volume		1.06 in³ (17.4 cm³)				
Mass		2.04 kg *5)				

*1) Source pressure above 1000 psig (6.9 MPa) decreases maximum delivery pressure to less than 150 psig (1 MPa) due to supply pressure effect. When the source pressure is 2300 psig (15.9 MPa), achievable delivery pressure is around 129 psig (0.89 MPa).
*2) -10 to 90 °C for Vespel® seat.
*3) Tested with Helium gas inlet pressure 1500 psig (10.5 MPa).
*4) Tested with Helium gas inlet pressure 1000 psig (7 MPa).
*5) Mass, including individual boxed weight, may vary depending on connections or options.

Option

High inlet pressure

Changes from the standard type are:

Option	Other Parameters	AZ1410T	AZ1415T
HR	**Source pressure**	Vacuum to 3000 psig (20.7 MPa)	
	Proof pressure (Inlet)	4500 psig (31 MPa)	
	Burst pressure	9000 psig (62 MPa)	

Wetted Parts Material

Wetted Parts	S
Body	316L SS
Surface finish	Electropolish + Passivation
Poppet	Hastelloy® C-22
Diaphragm	Hastelloy® C-22
Nozzle	316L SS
Seat	PCTFE (Option: Vespel®)

Dimensions

inch (mm)

AZ1400T

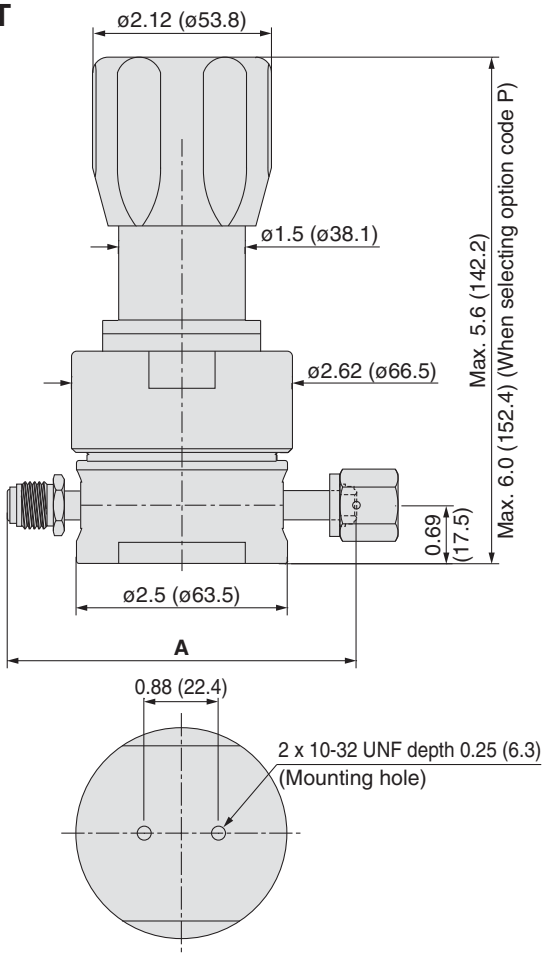

Connections	A	
	inch	(mm)
FV4	4.30	(109.2)
MV4		
FV6	5.22	(132.6)
MV6		
TW6	4.00	(101.6)
FV8	5.22	(132.6)
MV8		
TW8	4.34	(110.2)

Flow Characteristics

AZ1400T

Inlet pressure: ---- 80 psig (0.55 MPa) —— 60 psig (0.41 MPa)

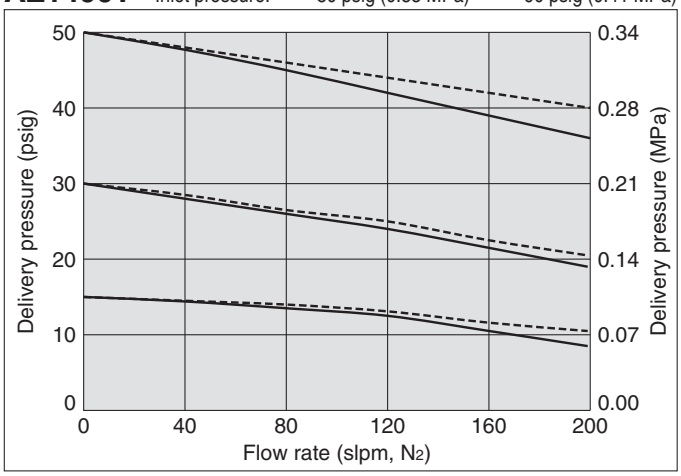

AZ1400T

Inlet pressure: --- 2000 psig (13.8 MPa) ---- 600 psig (4.1 MPa) —— 200 psig (1.4 MPa)

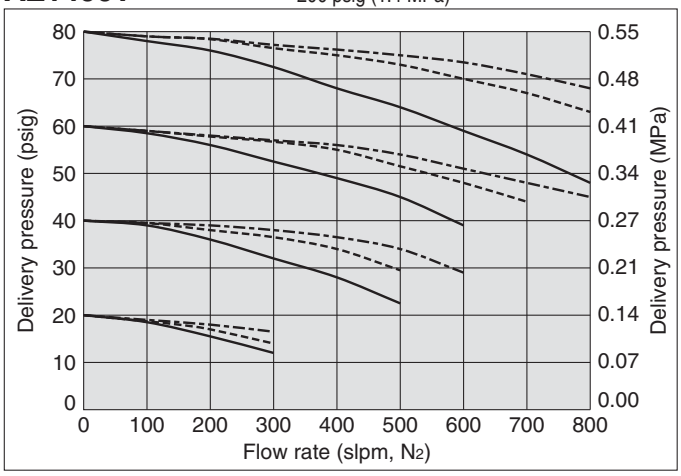

AZ1402TA

Inlet pressure: 2 psig (14 kPa)

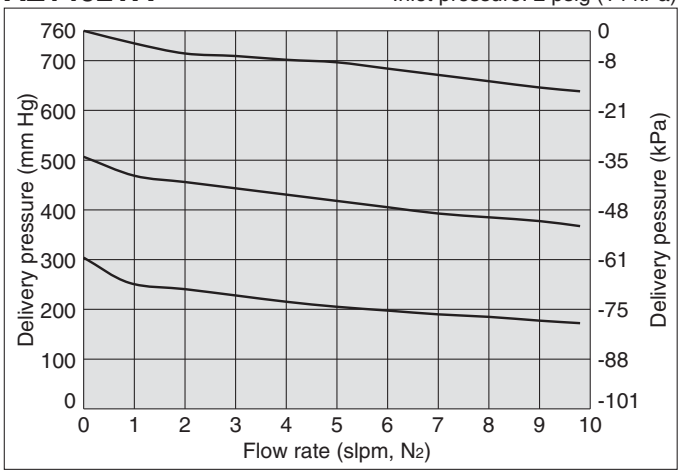

Hastelloy® is a registered trademark of Haynes International.
Vespel® is a registered trademark of DuPont.

Single Stage Regulator for Ultra High Purity | High flow

Series AZ1300

- For UHP gas delivery
- Flow capacity to 1000 slpm
- Body material: 316L SS
- Inlet pressure: Max. 300 psig (2.1 MPa)

How to Order

Port Number ① ② ③ ④

AZ13 02 S □ 2PW FV8 FV8 □ □ □ □ □

Delivery pressure

Code	Delivery pressure
02	1 to 30 psig (0.007 to 0.2 MPa)
06	2 to 60 psig (0.014 to 0.4 MPa)
10	2 to 100 psig (0.014 to 0.7 MPa)
15	5 to 150 psig (0.034 to 1.0 MPa)

Material

Code	Body	Poppet	Diaphragm
S	316L SS	316L SS	Hastelloy® C-22

Surface finish

Code	Surface finish Ra
No code	10 µin. (0.25 µm) Standard
Q	25 µin. (0.62 µm)

Ports

Code	Ports
2PW	2 ports
3PW	3 ports
4PW	4 ports

Connections (Inlet①, Outlet②)

Code	Connections
FV4	1/4 inch face seal (Female)
MV4	1/4 inch face seal (Male)
FV6	3/8 inch face seal (Female)
MV6	3/8 inch face seal (Male)
TW6	3/8 inch tube weld
FV8	1/2 inch face seal (Female)
MV8	1/2 inch face seal (Male)
TW8	1/2 inch tube weld

Gauge port (Inlet③, Outlet④)

Code	Pressure gauge *1)	
	psig/bar unit	MPa unit
No code	No gauge port	
0	No pressure gauge (Connections: 1/4 inch face seal male)	
V3	-30 in.Hg to 30 psig	-0.1 to 0.2 MPa
L	-30 in.Hg to 60 psig	-0.1 to 0.4 MPa
1	-30 in.Hg to 100 psig	-0.1 to 0.7 MPa
H	-30 in.Hg to 160 psig	-0.1 to 1.1 MPa
2	0 to 200 psig	0 to 1.4 MPa
4	0 to 400 psig	0 to 3 MPa

*1) Refer to gauge guide (P.94) for gauge specifications.

Bonnet option

Code	Bonnet
No code	Standard
P	Panel installation*4)
BP	Bonnet port (NPT 1/8 inch)

*4) Panel mounting hole: dia. 1.56 inch (39.6 mm).

Seat material

Code	Material
No code	PCTFE (Standard)
TF	PTFE *3)

*3) PTFE recommended for applications such as within a process tool.

Pressure gauge unit *2)

Code	Unit
No code	psig/bar
MPA	MPa

*2) Pressure gauge unit MPa or psig/bar selectable. However under Japanese regulation, only MPa is available in Japan.

Sample Order Number

	Port ①	②	③	④		
AZ1302S	2PW	FV8	FV8			
	3PW	FV8	FV8		0	
	3PW	FV8	FV8		V3	MPA
	4PW	FV8	FV8	H	V3	MPA

Porting Configuration

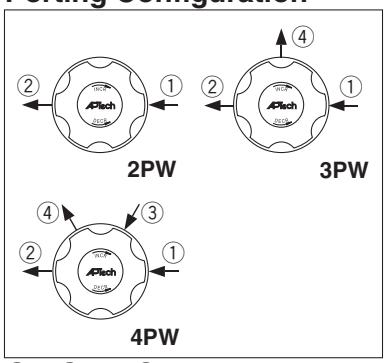

①IN ②OUT ③Gauge port (Inlet)
④Gauge port (Outlet)

Specifications

Operating Parameters		AZ1302	AZ1306	AZ1310	AZ1315
Delivery pressure		1 to 30 psig (0.007 to 0.2 MPa)	2 to 60 psig (0.014 to 0.4 MPa)	2 to 100 psig (0.014 to 0.7 MPa)	5 to 150 psig (0.034 to 1.0 MPa)
Gas		Select compatible materials of construction for the gas			
Source pressure		Vacuum to 300 psig (2.1 MPa)			
Proof pressure (Inlet)		450 psig (3.1 MPa)			
Burst pressure		1200 psig (8.3 MPa)			
Ambient and operating temperature		-40 to 71 °C (No freezing)			
Cv		1.1			
Leak rate	Inboard leakage	2×10^{-11} Pa·m³/sec			
	Outboard leakage	1×10^{-10} Pa·m³/sec *1)			
Across the seat leak		4×10^{-9} Pa·m³/sec			
Surface finish		Ra 10 µin. (0.25 µm) Option: 25 µin. (0.62 µm)			
Connections		Face seal, Tube weld			
Supply pressure effect		4.6 psig (0.031 MPa) rise in delivery pressure per 100 psig (0.7 MPa) source pressure drop			
Installation		Bottom mount (Option: panel mount)			
Internal volume		1.19 in³ (19.6 cm³)			
Mass		2.0 kg *2)			

*1) Tested with Helium gas inlet pressure 300 psig (2.1 MPa).
*2) Mass, including individual boxed weight, may vary depending on connections or options.

Wetted Parts Material

Wetted Parts	S
Body	316L SS
Surface finish	Electropolish + Passivation
Nozzle	316L SS
Poppet	316L SS
Diaphragm	Hastelloy® C-22
Seat	PCTFE (Option: PTFE)

Dimensions

inch (mm)

AZ1300

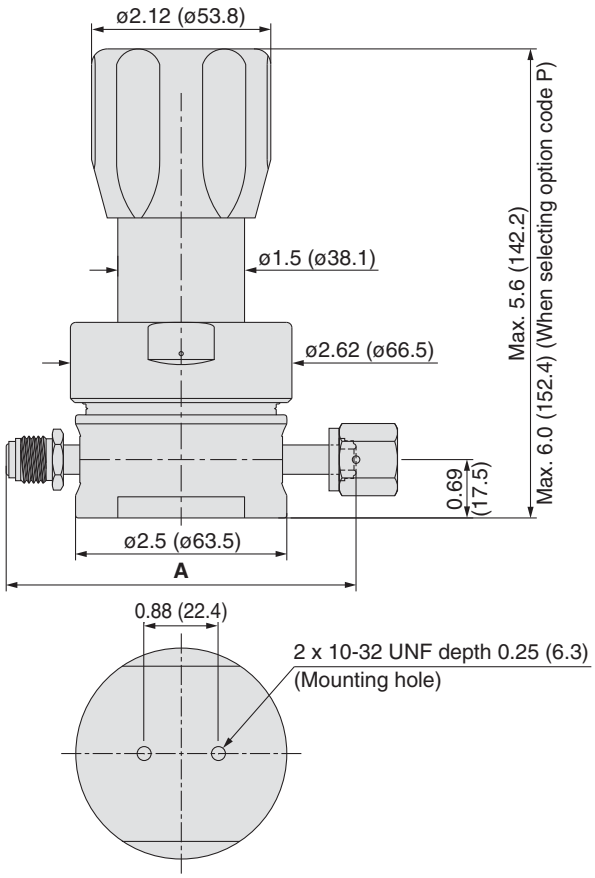

Connections	A	
	inch	(mm)
FV4	4.30	(109.2)
MV4		
FV6	5.22	(132.6)
MV6		
TW6	4.00	(101.6)
FV8	5.22	(132.6)
MV8		
TW8	4.34	(110.2)

Flow Characteristics

AZ1300

Inlet pressure: 150 psig (1.0 MPa) 100 psig (0.69 MPa) 75 psig (0.52 MPa)

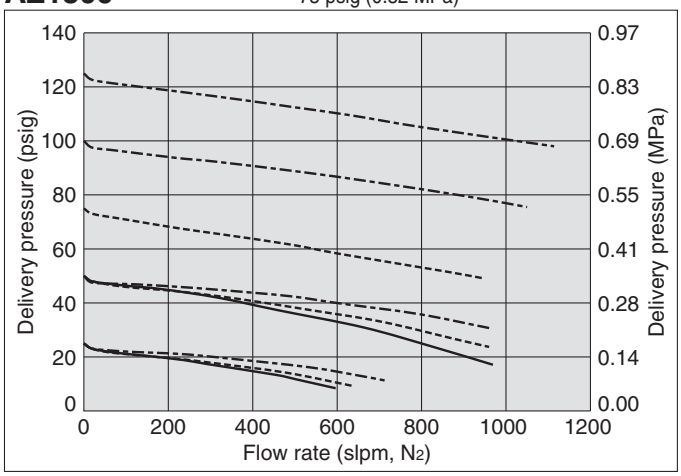

AZ1300

Inlet pressure: 75 psig (0.52 MPa) 50 psig (0.34 MPa) 25 MPa (0.17MPa)

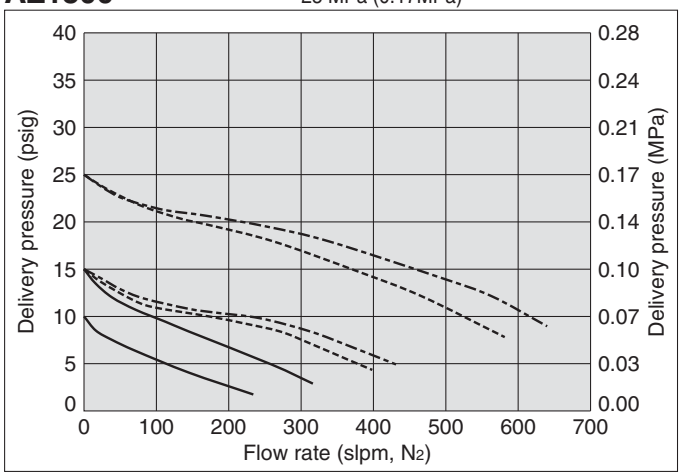

Hastelloy® is a registered trademark of Haynes International.

Single Stage Regulator for Ultra High Purity | High flow (Tied-diaphragm)

Series AZ1200

- **For UHP gas delivery**
- **High inlet pressure type** Standard: Max. 1700 psig (11.7 MPa)
  HR (option): Max. 3000 psig (20.7 MPa)
- **Flow capacity** Standard to 800 slpm
  HF (option): to 1000 slpm
  FC (option): to 1500 slpm
- **Body material: 316L SS**
- **Hastelloy internals available for corrosion resistance**

How to Order

Port Number ① ② ③ ④

AZ12 | 02 | S | | 2PW | FV8 | FV8 | | | | | | |

Delivery pressure

Code	Delivery pressure
02	1 to 30 psig (0.007 to 0.2 MPa)
06	2 to 60 psig (0.014 to 0.4 MPa)
10	2 to 100 psig (0.014 to 0.7 MPa)
15	5 to 150 psig (0.034 to 1.0 MPa)
25	Preset to 250 psig (1.7 MPa (Preset))

Material

Code	Body	Poppet	Diaphragm
S	316L SS	316L SS	Hastelloy® C-22
SHP		Hastelloy® C-22	

Surface finish

Code	Surface finish Ra
No code	10 µin. (0.25 µm) Standard
Q	25 µin. (0.62 µm)

Ports

Code	Ports
2PW	2 ports
3PW	3 ports
4PW	4 ports

Connections (Inlet①, Outlet②)

Code	Connections
FV4	1/4 inch face seal (Female)
MV4	1/4 inch face seal (Male)
FV6	3/8 inch face seal (Female)
MV6	3/8 inch face seal (Male)
TW6	3/8 inch tube weld
FV8	1/2 inch face seal (Female)
MV8	1/2 inch face seal (Male)
TW8	1/2 inch tube weld

Gauge port (Inlet③, Outlet④)

Code	Pressure gauge *1)	
	psig/bar unit	MPa unit
No code	No gauge port	
0	No pressure gauge (Connections: 1/4 inch face seal male)	
V3	-30 in.Hg to 30 psig	-0.1 to 0.2 MPa
L	-30 in.Hg to 60 psig	-0.1 to 0.4 MPa
1	-30 in.Hg to 100 psig	-0.1 to 0.7 MPa
H	-30 in.Hg to 160 psig	-0.1 to 1.1 MPa
2	0 to 200 psig	0 to 1.4 MPa
4	0 to 400 psig	0 to 3 MPa
10	0 to 1000 psig	0 to 7 MPa
40	0 to 4000 psig	0 to 28 MPa

*1) Refer to gauge guide (P.94) for gauge specifications.

Bonnet option

Code	Bonnet
No code	Standard
P	Panel installation*6)
BP	Bonnet port (NPT 1/8 inch)

*6) Panel mounting hole: dia. 1.56 inch (39.6 mm).

Option

Code	Specification
No code	Standard (Cv: 0.65)
HF	High flow (Cv: 1.1)
FC	Force compensation (Cv: 0.65) *4)*5)
HR	High inlet pressure (Max. inlet pressure 3000 psig (20.7 MPa)) *4)

*4) FC and HR options are not available with AZ1202, AZ1206 and AZ1225.
*5) FC option is available with 1/2 inch face seal or 1/2 inch tube weld.

Seat material

Code	Material
No code	PCTFE (Standard)
VS	Vespel® *3)

*3) Not available with SHP material.

Pressure gauge unit *2)

Code	Unit
No code	psig/bar
MPA	MPa

*2) Pressure gauge unit MPa or psig/bar selectable. However under Japanese regulation, only MPa is available in Japan.

Porting Configuration

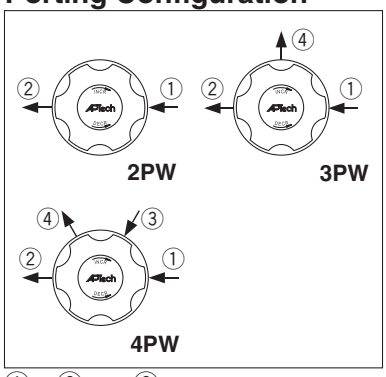

①IN ②OUT ③Gauge port (Inlet)
④Gauge port (Outlet)

Sample Order Number

	Port ①	②	③	④		
AZ1210S	2PW	FV8	FV8			
	3PW	FV8	FV8		0	
	3PW	FV8	FV8		1	MPA
	4PW	FV8	FV8	40	1	MPA

Specifications

Operating Parameters		AZ1202	AZ1206	AZ1210	AZ1215	AZ1225
Delivery pressure		1 to 30 psig (0.007 to 0.2 MPa)	2 to 60 psig (0.014 to 0.4 MPa)	2 to 100 psig (0.014 to 0.7 MPa)	5 to 150 psig (0.034 to 1.0 MPa) (Source pressure 1000 psig or less) *1)	Preset to 250 psig (1.7 MPa) *2)
Gas		Select compatible materials of construction for the gas				
Source pressure		Vacuum to 1700 psig (11.7 MPa)				
Proof pressure (Inlet)		2550 psig (17.6 MPa)				
Burst pressure		8000 psig (55.2 MPa)				
Ambient and operating temperature		-40 to 71 °C (No freezing) *3)				
Cv		0.65				
Leak rate	Inboard leakage	2×10^{-11} Pa·m³/sec				
	Outboard leakage	2×10^{-10} Pa·m³/sec *4)				
Across the seat leak		4×10^{-9} Pa·m³/sec *5)				
Surface finish		Ra 10 µin.(0.25 µm) Option: 25 µin.(0.62 µm)				
Connections		Face seal, Tube weld				
Supply pressure effect		3.5 psig (0.024 MPa) rise in delivery pressure per 100 psig (0.7 MPa) source pressure drop				
Installation		Bottom mount (Option: panel mount)				
Internal volume		1.07 in³ (17.6 cm³)				
Mass		2.0 kg *6)				

*1) Source pressure above 1000 psig (6.9 MPa) decreases maximum delivery pressure to less than 150 psig (1 MPa) due to supply pressure effect. When the source pressure is 1700 psig (11.7 MPa), achievable delivery pressure is around 125 psig (0.86 MPa) (HF and FC option 120 psig (0.83 MPa)).
*2) 250 psig outlet pressure preset at 800 psig (5.5MPa) inlet pressure. Custom inlet/outlet pressure settings available. Please contact SMC.
*3) -10 to 90 °C for Vespel® seat.
*4) Tested with Helium gas inlet pressure 1500 psig (10.5 MPa).
*5) Tested with Helium gas inlet pressure 1000 psig (7 MPa).
*6) Mass, including individual boxed weight, may vary depending on connections or options.

Options

1. High flow

Higher flow capacity with internal changes only, no change in external dimensions. Changes from the standard type are:

Option	Other Parameters	AZ1202	AZ1206	AZ1210	AZ1215	AZ1225
HF	Cv	1.1				
	Supply pressure effect	4.2 psig (0.029 MPa) rise in delivery pressure per 100 psig (0.7 MPa) source pressure drop				

2. Force compensation

Force compensation feature added to HF option and has wider flow capacity than HF option.
Changes from the standard type are:

Option	Other Parameters	AZ1210	AZ1215
FC	Source pressure	Vacuum to 300 psig (2.1 MPa)	
	Cv	0.65	
	Supply pressure effect	4.2 psig (0.029 MPa) rise in delivery pressure per 100 psig (0.7 MPa) source pressure drop	
	Connections	1/2 inch face seal 1/2 inch tube weld	

3. High inlet pressure

Changes from the standard type are:

Option	Other Parameters	AZ1210	AZ1215
HR	Source pressure	Vacuum to 3000 psig (20.7 MPa)	
	Proof pressure (Inlet)	4500 psig (31 MPa)	
	Burst pressure	9000 psig (62 MPa)	

Dimensions

inch (mm)

AZ1200

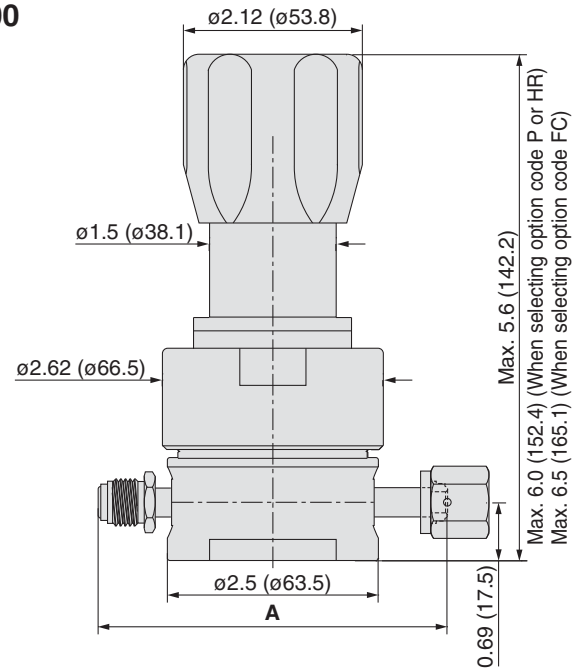

Connections	A inch	A (mm)
FV4	4.30	(109.2)
MV4		
FV6	5.22	(132.6)
MV6		
TW6	4.00	(101.6)
FV8	5.22	(132.6)
MV8		
TW8	4.34	(110.2)

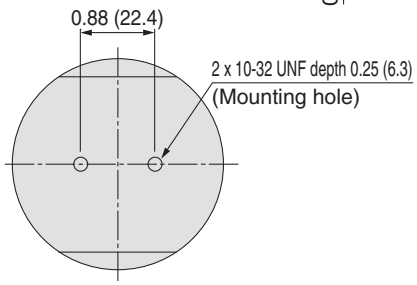

Hastelloy® is a registered trademark of Haynes International.
Vespel® is a registered trademark of DuPont.

Wetted Parts Material

Wetted Parts	S	SH
Body	316L SS	
Surface finish	Electropolish + Passivation	
Poppet	316L SS	Hastelloy® C-22
Diaphragm	Hastelloy® C-22	
Nozzle	316L SS	
Seat	PCTFE (Option: Vespel®)	PCTFE

Flow Characteristics

AZ1200

Inlet pressure: ---- 80 psig (0.55 MPa) —— 60 psig (0.41 MPa)
1/2 inch connections *)

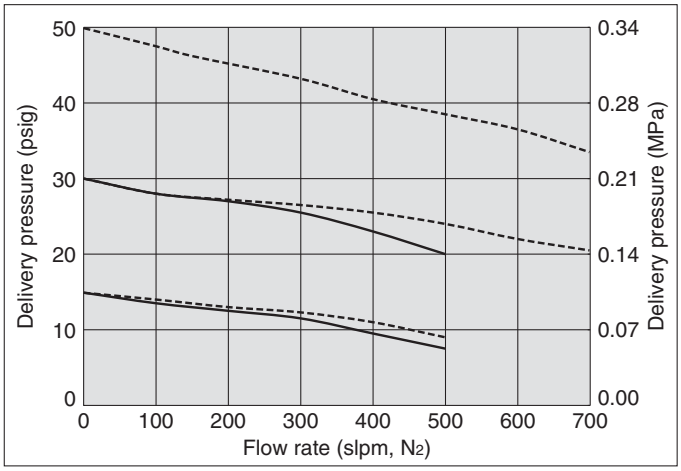

AZ1200HF

Inlet pressure: ---- 150 psig (1.0 MPa) ---- 100 psig (0.69 MPa)
—— 50 psig (0.34 MPa)

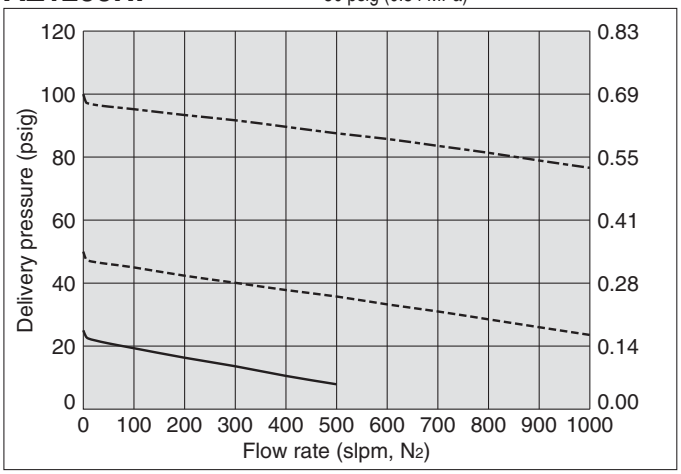

AZ1200FC

Inlet pressure: 150 psig (1.0 MPa)
3/4 inch connections *)

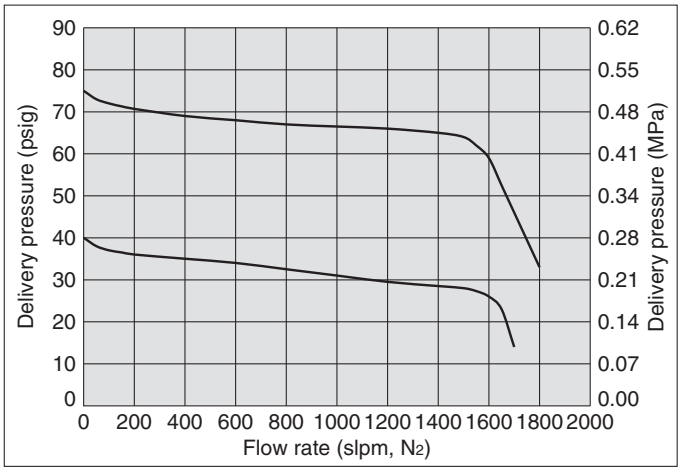

*) If connection size differs, flow characteristics also differ.

Single Stage Regulator for Ultra High Purity

High flow (Tied-diaphragm)

Series AZ9200

- **For UHP gas delivery**
- **Inlet pressure : Max. 300 psig (2.1 MPa)**
- **Flow capacity to 2000 slpm**
- **Body material: 316L SS**

How to Order

AZ92 [02] [S] [2PW] [FV12] [FV12] [ ] [ ] [ ]

Port Number: ① ② ③

Delivery pressure

Code	Delivery pressure
02	1 to 30 psig (0.007 to 0.2 MPa)
06	2 to 60 psig (0.014 to 0.4 MPa)
10	2 to 100 psig (0.014 to 0.7 MPa)
15	5 to 150 psig (0.034 to 1.0 MPa)

Material

Code	Body	Poppet	Diaphragm
S	316L SS	316L SS	Hastelloy® C-22

Ports

Code	Ports
2PW	2 ports
3PW	3 ports

Porting Configuration

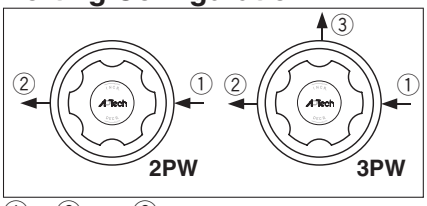

①IN ②OUT ③Gauge port (Outlet)

Connections (Inlet①, Outlet②)

Code	Connections
FV12	3/4 inch face seal (Female)
MV12	3/4 inch face seal (Male)
TW12	3/4 inch tube weld
FV16	1 inch face seal (Female)
MV16	1 inch face seal (Male)
TW16	1 inch tube weld

Gauge port *1) (Outlet③)

Code	Pressure gauge	
	psig/bar unit	MPa unit
No code	No gauge port	
0	No pressure gauge (Connections: 1/4 inch face seal male)	
V3	-30 in.Hg to 30 psig	-0.1 to 0.2 MPa
L	-30 in.Hg to 60 psig	-0.1 to 0.4 MPa
1	-30 in.Hg to 100 psig	-0.1 to 0.7 MPa
H	-30 in.Hg to 160 psig	-0.1 to 1.1 MPa

*1) Other range available. Refer to gauge guide (P.94).

Pressure gauge unit *2)

Code	Unit
No code	psig/bar
MPA	MPa

*2) Pressure gauge unit MPa or psig/bar selectable. However under Japanese regulation, only MPa is available in Japan.

Bonnet option

Code	Bonnet
No code	Standard
P	Panel Installation *3)
BP	Bonnet port (NPT 1/8 inch)

*3) Panel mounting hole: dia.39.6 mm.

Specifications

Operating Parameters		AZ9202	AZ9206	AZ9210	AZ9215
Delivery pressure		1 to 30 psig (0.007 to 0.2 MPa)	2 to 60 psig (0.014 to 0.4 MPa)	2 to 100 psig (0.014 to 0.7 MPa)	5 to 150 psig (0.034 to 1.0 MPa)
Gas		Select compatible materials of construction for the gas			
Source pressure		Vacuum to 300psig (2.1 MPa)			
Proof pressure (Inlet)		450 psig (3.1 MPa)			
Burst pressure		1500 psig (10.3 MPa)			
Ambient and operating temperature		-40 to 71 °C (No freezing)			
Cv		1.6			
Leak rate	**Inboard leakage**	2×10^{-11} Pa·m³/sec			
	Outboard leakage	1×10^{-10} Pa·m³/sec			
Across the seat leak		4×10^{-9} Pa·m³/sec			
Surface finish		Ra 10 µin. (0.25 µm)			
Connections		Face seal, Tube weld			
Supply pressure effect		7 psig (0.048 MPa) rise in delivery pressure per 100 psig (0.7 MPa) source pressure drop			
Installation		Bottom mount (Option: panel mount)			
Internal volume		2.2 in³ (36 cm³)			

Wetted Parts Material

Wetted Parts	S
Body	316L SS
Surface finish	Electropolish + Passivation
Nozzle	316L SS
Poppet	316L SS
Diaphragm	Hastelloy® C-22
Seat	PFA

Dimensions

inch (mm)

AZ9200

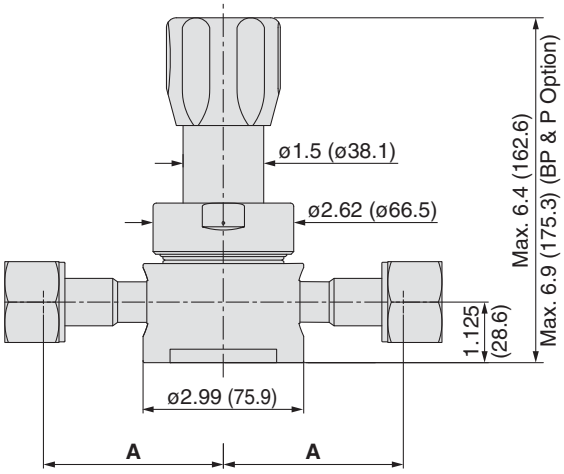

Connections	A	
	inch	(mm)
FV12	3.39	(86.1)
MV12		
TW12	3.00	(76.2)
FV16	3.67	(93.2)
MV16		
TW16	3.00	(76.2)

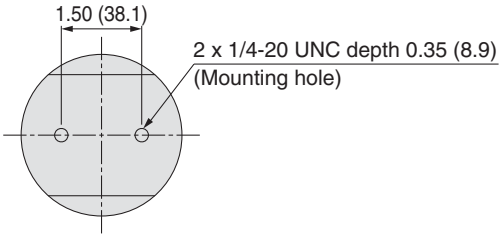

Flow Characteristics

AZ9200 Inlet pressure: ---- 150 psig (1.0 MPa) —— 100 psig (0.69 MPa)

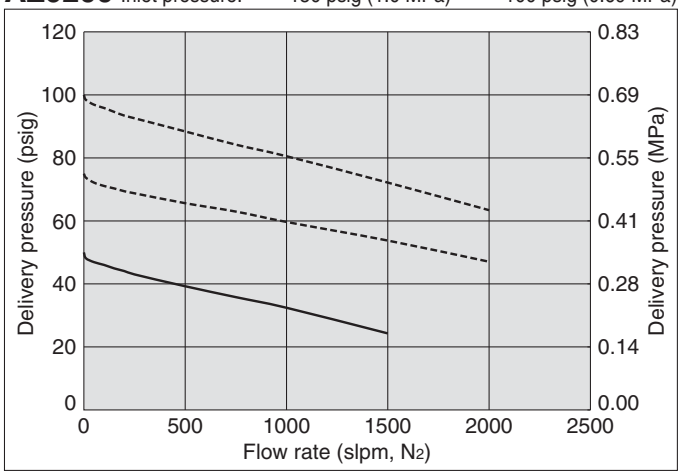

Hastelloy® is a registered trademark of Haynes International.

Single Stage Regulator for Ultra High Purity

Delivery of sub-atmospheric pressure

Series AZ1100

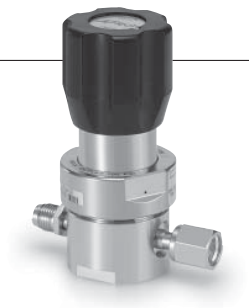

- **For UHP gas delivery**
- **Sub-atmospheric to low positive pressure delivery**
- **Flow capacity to 0.5 slpm**
- **Body material: 316L SS**
- **Hastelloy internals available for corrosion resistance**

How to Order

Port Number ① ② ③ ④

AZ11 01 S □ 2PW FV4 FV4 □ □ □ □ □

Delivery pressure

Code	Delivery pressure
01	100 mm Hg absolute to 10 psig (-88 kPa to 0.07 MPa)

Material

Code	Body	Poppet	Diaphragm	Nozzle
S	316L SS	316L SS	316L SS	316L SS
SHP		Hastelloy® C-22	Hastelloy® C-22	

Surface finish

Code	Surface finish Ra
No code	10 µin. (0.25 µm) Standard
Q	25 µin. (0.62 µm)

Ports

Code	Ports
2PW	2 ports
3PW	3 ports
4PW	4 ports

Connections (Inlet①, Outlet②)

Code	Connections
FV4	1/4 inch face seal (Female)
MV4	1/4 inch face seal (Male)
FV6	3/8 inch face seal (Female)
MV6	3/8 inch face seal (Male)
TW6	3/8 inch tube weld

Bonnet option

Code	Bonnet
No code	Standard
P	Panel installation ∗4)
BP	Bonnet port (NPT 1/8 inch)

∗4) Panel mounting hole: dia. 1.56 inch (39.6 mm).

Seat material

Code	Material
No code	PCTFE (Standard)
TF	PTFE ∗3)

∗3) PTFE recommended for applications such as within a process tool.

Pressure gauge unit ∗2)

Code	Unit
No code	psig/bar
MPA	MPa

∗2) Pressure gauge unit MPa or psig/bar selectable. However under Japanese regulation, only MPa is available in Japan.

Gauge port (Inlet③, Outlet④)

Code	Pressure gauge ∗1)	
	psig/bar unit	MPa unit
No code	No gauge port	
0	No pressure gauge (Connections: 1/4 inch face seal male)	
V3	-30 in.Hg to 30 psig	-0.1 to 0.2 MPa
L	-30 in.Hg to 60 psig	-0.1 to 0.4 MPa

∗1) Other range available. Refer to gauge guide (P.94).

Porting Configuration

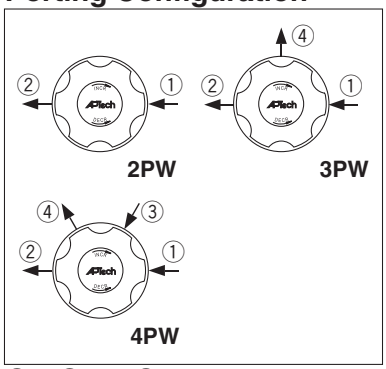

①IN ②OUT ③Gauge port (Inlet)
④Gauge port (Outlet)

Sample Order Number

	Port ①	②	③	④		
AZ1101S	2PW	FV4	FV4			
	3PW	FV4	FV4		0	
	3PW	FV4	FV4		V3	MPA
	4PW	FV4	FV4	V3	V3	MPA

Specifications

Operating Parameters		AZ1101
Delivery pressure		100 mm Hg absolute to 10 psig (-88 kPa to 0.07 MPa)
Gas		Select compatible materials of construction for the gas
Source pressure		Vacuum to 300 psig (2.1 MPa)
Proof pressure (Inlet)		500 psig (3.4 MPa)
Burst pressure		8000 psig (55.2 MPa)
Ambient and operating temperature		-40 to 71 °C (No freezing)
Cv		0.05
Leak rate	**Inboard leakage**	2×10^{-11} Pa·m³/sec
	Outboard leakage	2×10^{-10} Pa·m³/sec ∗1)
Across the seat leak		4×10^{-9} Pa·m³/sec ∗1)
Surface finish		Ra 10 µin. (0.25 µm) Option: 25 µin. (0.62 µm)
Connections		Face seal, Tube weld
Installation		Bottom mount (Option: panel mount)
Internal volume		0.49 in³ (8 cm³)
Mass		1.25 kg ∗2)

∗1) Tested with Helium gas inlet pressure 300 psig (2.1 MPa).
∗2) Mass, including individual boxed weight, may vary depending on connections or options.

Wetted Parts Material

Wetted Parts	S	SHP
Body	316L SS	
Surface finish	Electropolish + Passivation	
Poppet	316L SS	Hastelloy® C-22
Diaphragm	316L SS	Hastelloy® C-22
Nozzle	316L SS	
Seat	PCTFE (Option: PTFE)	

Dimensions

inch (mm)

AZ1100

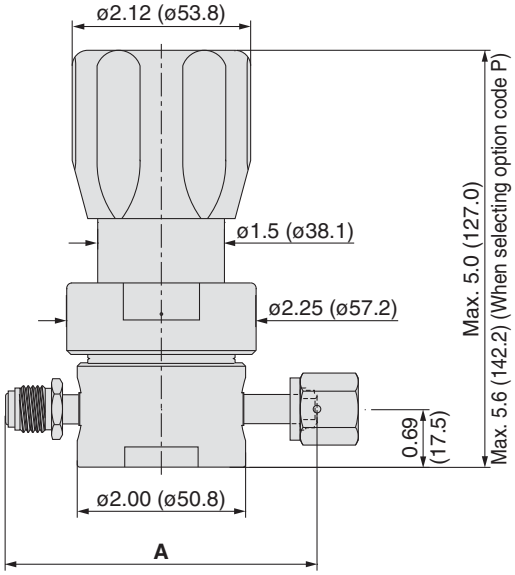

Connections	A	
	inch	(mm)
FV4	3.70	(94.0)
MV4		
FV6	4.70	(119.4)
MV6		
TW6	2.96	(75.2)

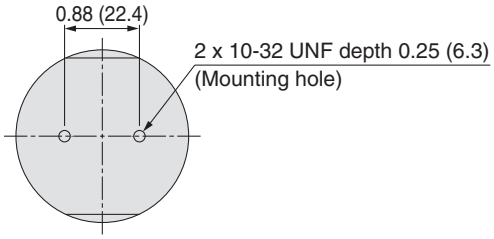

Flow Characteristics

AZ1100

Inlet pressure: 2 psig (14 kPa)

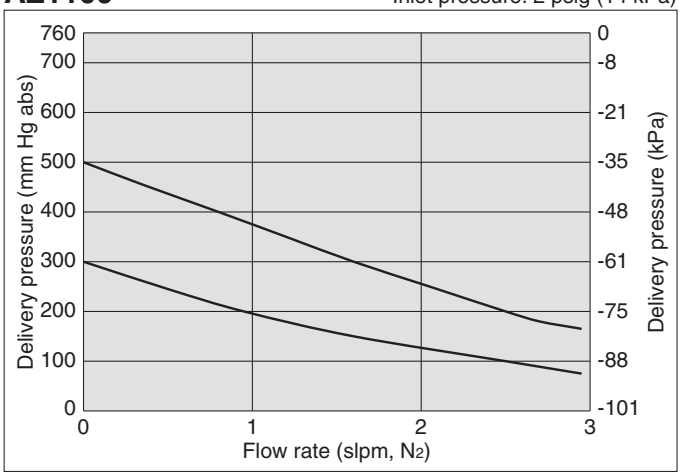

Hastelloy® is a registered trademark of Haynes International.

Single Stage Regulator for General Applications | Low to intermediate flow

Series AK1000

- **High inlet pressure type: Max. 3500 psig (24.1 MPa)**
- **Flow capacity Standard: to 30 slpm**
  HF (option): to 120 slpm
- **Body material: Stainless steel and Brass available**
- **Hastelloy internals available for corrosion resistance**

How to Order

AK10 01 S 4PL 4 4 0 0

Port Number: ① ② ③ ④ ⑤

Delivery pressure

Code	Delivery pressure	Code	Delivery pressure
01	0.5 to 10 psig (0.0034 to 0.07 MPa)	15	5 to 150 psig (0.034 to 1.0 MPa)
02	1 to 30 psig (0.007 to 0.2 MPa)	20	5 to 200 psig (0.034 to 1.4 MPa)
06	2 to 60 psig (0.014 to 0.4 MPa)	30	5 to 300 psig (0.034 to 2.1 MPa)
10	2 to 100 psig (0.014 to 0.7 MPa)	50	10 to 500 psig (0.07 to 3.4 MPa)

Material

Code	Body	Poppet	Diaphragm
B	Brass	316 SS	316 SS
S	316 SS		
SH		Hastelloy® C-22	Hastelloy® C-22

Ports

Code	Ports	Material B	Material S, SH
2P	Refer to the following porting configurations.		●
3P			●
4P			●
4PL		●	●
5PC		●	●

Porting Configuration

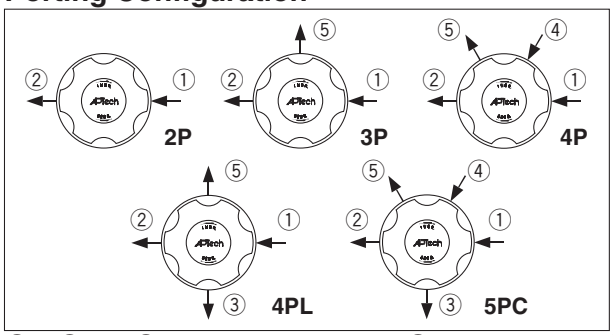

①IN ②OUT ③Extra bottom port (Outlet) ④Gauge port (Inlet) ⑤Gauge port (Outlet)

Connections (Inlet①, Outlet②)

Code	Connections
4	NPT 1/4 inch
4T	1/4 inch compression
6T	3/8 inch compression

Gauge port (Extra bottom outlet③, Inlet④, Outlet⑤)

Code	Pressure gauge *1) psig/bar unit	Pressure gauge *1) MPa unitunit
No code	No gauge port	
0	No pressure gauge (Connections: 1/4 inch NPT)	
V3	-30 in.Hg to 30 psig	-0.1 to 0.2 MPa
1	-30 in.Hg to 100 psig	-0.1 to 0.7 MPa
2	0 to 200 psig	0 to 1.5 MPa
10	0 to 1000 psig	0 to 7 MPa
40	0 to 4000 psig	0 to 28 MPa

*1) Other range available. Refer to gauge guide (P.94,95).

Sample Order Number

	Port	①	②	③	④	⑤	
AK1002S	2P	4	4				
	3P	4	4			V3	MPA
	4P	4	4		1	V3	MPA
	4PL	4	4	0		V3	MPA
	5PC	4	4	0	1	V3	MPA

Bonnet option

Code	Bonnet
No code	Standard
P	Panel installation *6)

*6) Panel mounting hole: dia. 1.42 inch (36.1 mm).

Option

Code	Specification
No code	Standard (Cv: 0.09)
HF	High flow (Cv: 0.15)

Seat material

Code	Material
No code	PCTFE (Standard)
VS	Vespel® *3)
PK	PEEK
TF	PTFE *4) *5)

*3) Not available with SH material.
*4) Source pressure rating is limited to 300 psig (2.1 MPa) or less.
*5) PTFE seats reduce seat abrasion for flow cycle application. Gas permeation is greater with PTFE than PCTFE.

Pressure gauge unit *2)

Code	Unit
No code	psig/bar
MPA	MPa

*2) Pressure gauge unit MPa or psig/bar selectable. However under Japanese regulation, only MPa is available in Japan.

Specifications

Operating Parameters	AK1001	AK1002	AK1006	AK1010	AK1015	AK1020	AK1030	AK1050
Delivery pressure	0.5 to 10 psig (0.0034 to 0.07 MPa)	1 to 30 psig (0.007 to 0.2 MPa)	2 to 60 psig (0.014 to 0.4 MPa)	2 to 100 psig (0.014 to 0.7 MPa)	5 to 150 psig (0.034 to 1.0 MPa)	5 to 200 psig (0.034 to 1.4 MPa)	5 to 300 psig (0.034 to 2.1 MPa)	10 to 500 psig (0.07 to 3.4 MPa)
Gas	Select compatible materials of construction for the gas							
Source pressure	Vacuum to 300 psig (2.1 MPa)	Vacuum to 3500 psig (24.1 MPa) *1)						
Proof pressure (Inlet)	4500 psig (30.7 MPa)							
Burst pressure	10000 psig (69 MPa)							
Ambient and operating temperature	-40 to 71 °C (No freezing) *2)							
Cv	0.09							
Leak rate	1 x 10^{-10} Pa·m³/sec							
Connections	NPT female, Compression							
Supply pressure effect	0.38 pisg (0.0026 MPa) rise in delivery pressure per 100 psig (0.7 MPa) source pressure drop							
Installation	Bottom mount (Option: panel mount)							
Internal volume	0.49 in³ (8 cm³)							
Mass	1.09 kg *3)							

*1) Max 300 psig (2.1 MPa) for PTFE seat.
*2) -10 to 90 °C for Vespel® and PEEK seat. Optional ambient and operating temperature range available. Please contact SMC.
*3) Mass, including individual boxed weight, may vary depending on connections or options.

Option

High flow

Higher flow capacity with internal changes only, no change in external dimensions. Changes from the standard type are:

Option	Other Parameters	AK1001	AK1002	AK1006	AK1010	AK1015	AK1020	AK1030	AK1050
HF	**Cv**	0.15							
	Supply pressure effect	0.75 psig (0.0052 MPa) rise in delivery pressure per 100 psig (0.7 MPa) source pressure drop							

Wetted Parts Material

Wetted Parts	B	S	SH
Body	Brass	316 SS	
Poppet	316 SS		Hastelloy® C-22
Diaphragm	316 SS		Hastelloy® C-22
Seat	PCTFE (Option: Vespel®, PEEK, PTFE)		PCTFE (Option: PEEK, PTFE)

Dimensions

inch (mm)

AK1000

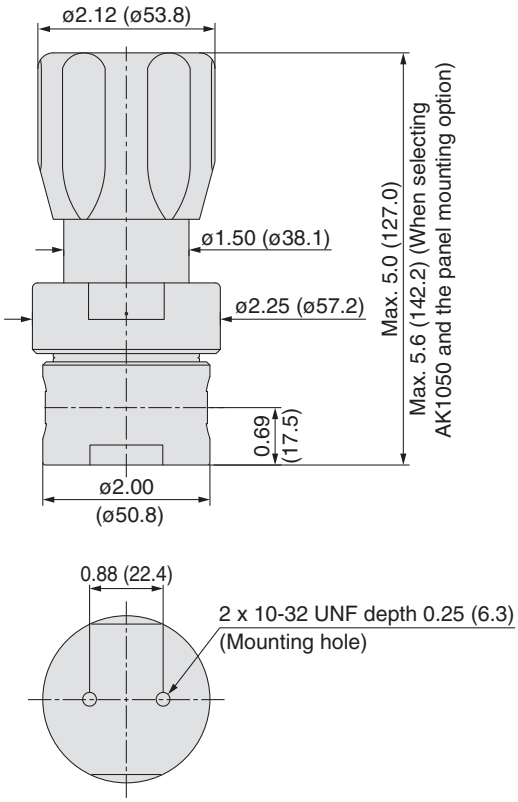

Flow Characteristics

AK1000

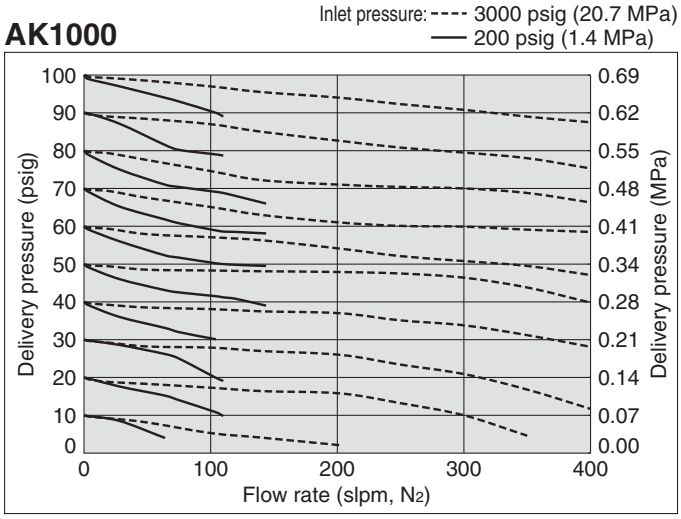

AK1000

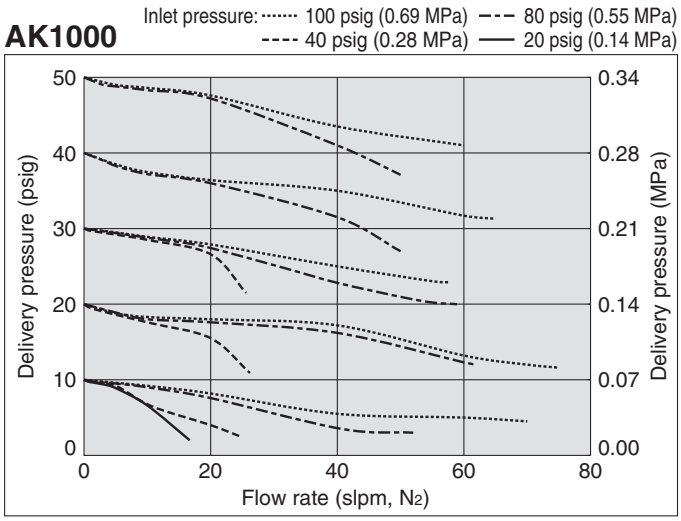

AK1000HF

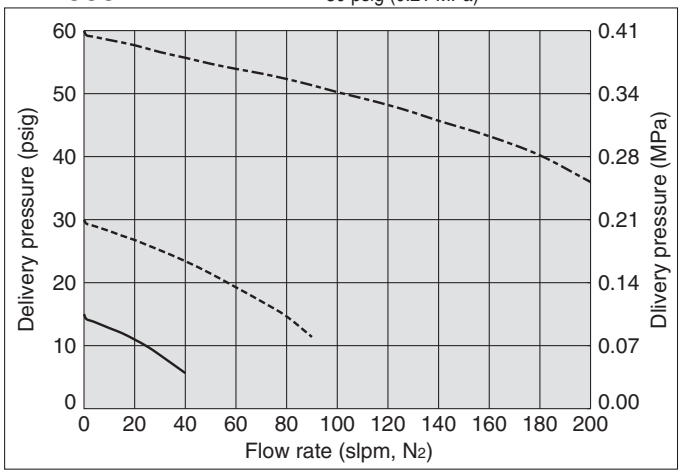

Hastelloy® is a registered trademark of Haynes International.
Vespel® is a registered trademark of DuPont.

Single Stage Regulator for General Applications | Low flow (Tied-diaphragm)

Series AK1500

- High inlet pressure type: Max. 3500 psig (24.1 MPa)
- Flow capacity: to 30 slpm
- Body material: Stainless steel and Brass available
- Hastelloy internals available for corrosion resistance
- Tied-diaphragm design

How to Order

AK15 02 S 4PL 4 4 0 0

Port Number: ① ② ③ ④ ⑤

Delivery pressure

Code	Delivery pressure
02	1 to 30 psig (0.007 to 0.2 MPa)
06	2 to 60 psig (0.014 to 0.4 MPa)
10	2 to 100 psig (0.014 to 0.7 MPa)
15	5 to 150 psig (0.034 to 1.0 MPa)

Material

Code	Body	Poppet	Diaphragm
B	Brass	316 SS	316 SS
S	316 SS		
SH		Hastelloy® C-22	Hastelloy® C-22

Ports

Code	Ports	Material B	Material S, SH
2P	Refer to the following porting configurations.		●
3P			●
4PL		●	●
5PC		●	●

Connections (Inlet①, Outlet②)

Code	Connections
4	NPT 1/4 inch
4T	1/4 inch compression
6T	3/8 inch compression

Gauge port (Extra bottom outlet③, Inlet④, Outlet⑤)

Code	Pressure gauge *1) psig/bar unit	Pressure gauge *1) MPa unit
No code	No gauge port	
0	No pressure gauge (Connections: 1/4 inch NPT)	
V3	-30 in.Hg to 30 psig	-0.1 to 0.2 MPa
1	-30 in.Hg to 100 psig	-0.1 to 0.7 MPa
2	0 to 200 psig	0 to 1.5 MPa
10	0 to 1000 psig	0 to 7 MPa
40	0 to 4000 psig	0 to 28 MPa

*1) Other range available. Refer to gauge guide (P.94,95).

Pressure gauge unit *2)

Code	Unit
No code	psig/bar
MPA	MPa

*2) Pressure gauge unit MPa or psig/bar selectable. However under Japanese regulation, only MPa is available in Japan.

Bonnet option

Code	Bonnet
No code	Standard
P	Panel installation *4)

*4) Panel mounting hole: dia. 1.42 inch (36.1 mm).

Seat material

Code	Material
No code	PCTFE (Standard)
VS	Vespel® *3)
PK	PEEK

*3) Not available with SH material.

Sample Order Number

	Port	①	②	③	④	⑤	
AK1510S	2P	4	4				
	3P	4	4			1	MPA
	4PL	4	4	0		1	MPA
	5PC	4	4	0	40	1	MPA

Porting Configuration

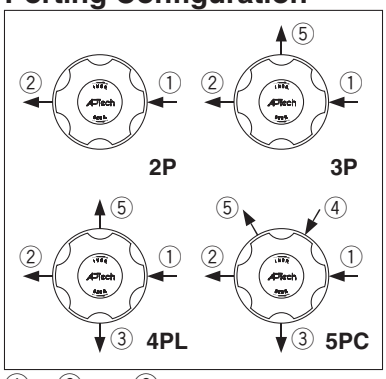

①IN ②OUT ③Extra bottom port (Outlet) ④Gauge port (Inlet) ⑤Gauge port (Outlet)

Specifications

Operating Parameters	AK1502	AK1506	AK1510	AK1515
Delivery pressure	1 to 30 psig (0.007 to 0.2 MPa)	2 to 60 psig (0.014 to 0.4 MPa)	2 to 100 psig (0.014 to 0.7 MPa)	5 to 150 psig (0.034 to 1.0 MPa)
Gas	Select compatible materials of construction for the gas			
Source pressure	Vacuum to 3500 psig (24.1 MPa)			
Proof pressure (inlet)	4500 psig (30.7 MPa)			
Burst pressure	10000 psig (69 MPa)			
Ambient and operating temperature	-40 to 71 °C (No freezing) *1)			
Cv	0.09			
Leak rate	1 x 10^{-10} Pa·m^3/sec			
Connections	NPT female, Compression			
Supply pressure effect	0.41 psig (0.0028 MPa) rise in delivery pressure per 100 psig (0.7 MPa) source pressure drop			
Installation	Bottom mount (Option: panel mount)			
Internal volume	0.49 in^3 (8 cm^3)			
Mass	1.18 kg *2)			

*1) -10 to 90 °C for Vespel® and PEEK seat. Optional ambient and operating temperature range available. Please contact SMC.
*2) Mass, including individual boxed weight, may vary depending on connections or options.

Wetted Parts Material

Wetted Parts	B	S	SH
Body	Brass	316 SS	
Poppet	316 SS		Hastelloy® C-22
Diaphragm	316 SS		Hastelloy® C-22
Seat	PCTFE (Option: Vespel®, PEEK)		PCTFE (Option: PEEK)

Dimensions

inch (mm)

AK1500

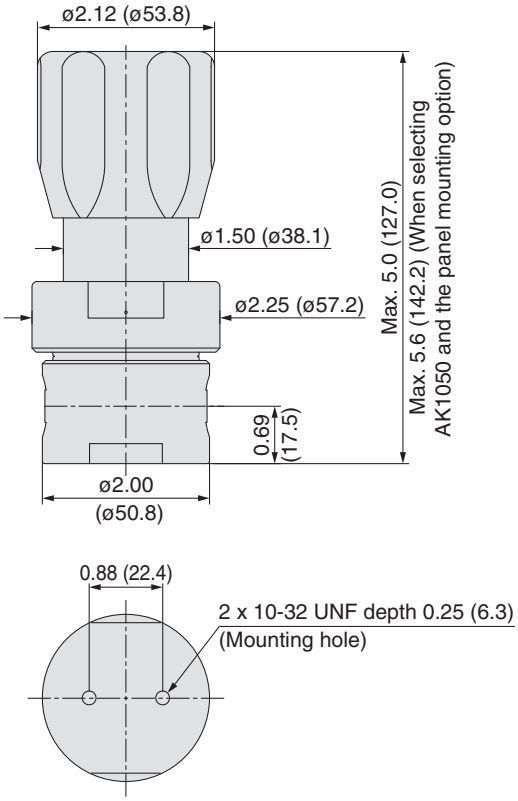

Flow Characteristics

AK1500

Inlet pressure: ---- 3000 psig (20.7 MPa) —— 200 psig (1.4 MPa)

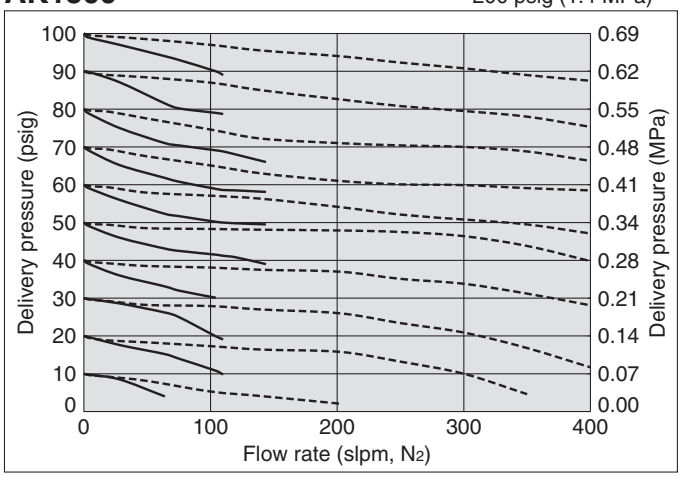

AK1500

Inlet pressure: ····· 100 psig (0.69 MPa) – – – 80 psig (0.55 MPa) ---- 40 psig (0.28 MPa) —— 20 psig (0.14 MPa)

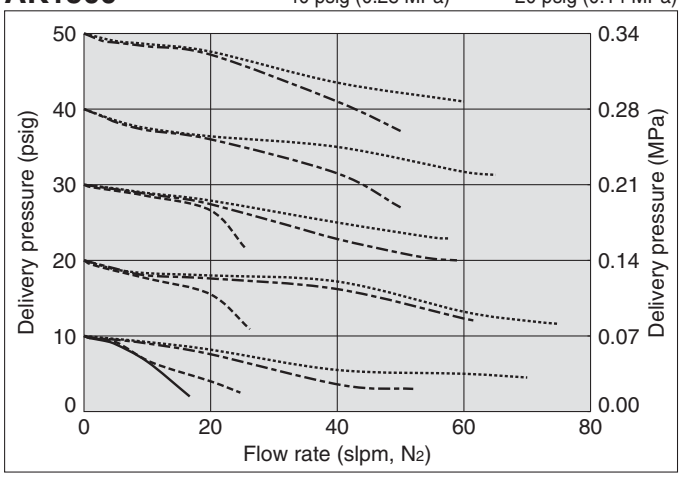

Hastelloy® is a registered trademark of Haynes International.
Vespel® is a registered trademark of DuPont.

Single Stage Regulator for General Applications

Intermediate flow (Tied-diaphragm)

Series AK1400T

- High inlet pressure type Standard: Max. 2300 psig (15.9 MPa)
  HR (option): Max. 3000 psig (20.7MPa)
- Flow capacity to 400 slpm
- Body material: Stainless steel and Brass available
- Hastelloy internals standard
- Sub-atmospheric pressure delivery option
- Tied-diaphragm design

How to Order

Port Number ① ② ③ ④ ⑤

AK14 02 T S 4PL 6 6 0 0

Delivery pressure

Code	Delivery pressure
02	1 to 30 psig (0.007 to 0.2 MPa)
	Sub-atmospheric (A): 100 mm Hg absolute to 30 psig (-88kPa to 0.2 MPa)
06	1 to 60 psig (0.007 to 0.4 MPa)
10	2 to 100 psig (0.014 to 0.7 MPa)
15	5 to 150 psig (0.034 to 1.0 MPa)

Material

Code	Body	Poppet	Diaphragm	Nozzle
B	Brass	Hastelloy® C-22	Hastelloy® C-22	316 SS
S	316 SS			
SH				Hastelloy® C-22

Porting Configuration

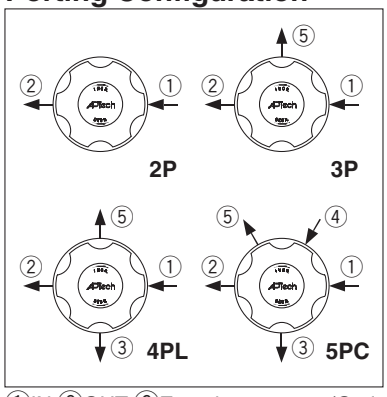

①IN ②OUT ③Extra bottom port (Outlet)
④Gauge port (Inlet) ⑤Gauge port (Outlet)

Connections(Inlet①, Outlet②)

Code	Connections
4	NPT 1/4 inch
6	NPT 3/8 inch
8	NPT 1/2 inch
4T	1/4 inch compression
6T	3/8 inch compression
8T	1/2 inch compression

Ports

Code	Ports	Material B	Material S, SH
2P	Refer to the following porting configurations.		●
3P			●
4PL		●	●
5PC		●	●

Range options *1)

Code	Specification
No code	Standard
A	Sub-atmospheric

*1) Only available with AK1402T.

Gauge port (Extra bottom outlet③, Inlet④, Outlet⑤)

Code	Pressure gauge *2) psig/bar unit	Pressure gauge *2) MPa unit
No code	No gauge port	
0	No pressure gauge (Connections: 1/4 inch NPT)	
V3	-30 in.Hg to 30 psig	-0.1 to 0.2 MPa
1	-30 in.Hg to 100 psig	-0.1 to 0.7 MPa
2	0 to 200 psig	0 to 1.5 MPa
10	0 to 1000 psig	0 to 7 MPa
40	0 to 4000 psig	0 to 28 MPa

*2) Other range available. Refer to gauge guide (P.94,95).

Bonnet option

Code	Bonnet
No code	Standard
P	Panel installation*6)
BP	Bonnet port (NPT 1/8 inch)

*6) Panel mounting hole: dia. 1.56 inch (39.6 mm).

Option

Code	Specification
No code	Standard
HR	High inlet pressure (Max. inlet pressure 3000 psig (20.7 MPa)) *5)

*5) Not available with AK1402T and AK1406T.

Seat material

Code	Material
No code	PCTFE (Standard)
VS	Vespel® *4)

*4) Not available with SH material.

Pressure gauge unit *3)

Code	Unit
No code	psig/bar
MPA	MPa

*3) Pressure gauge unit MPa or psig/bar selectable. However under Japanese regulation, only MPa is available in Japan.

Sample Order Number

	Port	①	②	③	④	⑤	
AK1410TS	2P	6	6				
	3P	6	6			1	MPA
	4PL	6	6	0		1	MPA
	5PC	6	6	0	40	1	MPA

Specifications

Operating Parameters	AK1402T□A	AK1402T	AK1406T	AK1410T	AK1415T
Delivery pressure	100 mm Hg absolute to 30 psig (-88 kPa to 0.2 MPa)	1 to 30 psig (0.007 to 0.2 MPa)	1 to 60 psig (0.007 to 0.4 MPa)	2 to 100 psig (0.014 to 0.7 MPa)	5 to 150 psig (0.034 to 1.0 MPa) (Source pressure 1000 psig or less) *1)
Gas	Select compatible materials of construction for the gas				
Source pressure	Vacuum to 300 psig (2.1 MPa)	Vacuum to 2300 psig (15.9 MPa)			
Proof pressure (Inlet)	4000 psig (27.6 MPa)				
Burst pressure	8000 psig (55.2 MPa)				
Ambient and operating temperature	-40 to 71 °C (No freezing) *2)				
Cv	0.45				
Leak rate	1 x 10^{-10} Pa·m³/sec				
Connections	NPT female, Compression				
Supply pressure effect	1.6 psig (0.011 MPa) rise in delivery pressure per 100 psig (0.7 MPa) source pressure drop				
Installation	Bottom mount (Option: panel mount)				
Internal volume	0.65 in³ (10.6 cm³)				
Mass	2.04 kg *3)				

*1) Source pressure above 1000 psig (6.9 MPa) decreases maximum delivery pressure to less than 150 psig (1 MPa) due to supply pressure effect. When the source pressure is 2300 psig (15.9 MPa), achievable delivery pressure is around 129 psig (0.89 MPa).
*2) -10 to 90 °C for Vespel® seat.
*3) Mass, including individual boxed weight, may vary depending on connections or options.

Option

High inlet pressure

Changes from the standard type are:

Option	Other Parameters	AK1410T	AK1415T
HR	**Source pressure**	Vacuum to 3000 psig (20.7 MPa)	
	Proof pressure (Inlet)	4500 psig (31 MPa)	
	Burst pressure	9000 psig (62 MPa)	

Wetted Parts Material

Wetted Parts	B	S	SH
Body	Brass	316 SS	
Poppet	Hastelloy® C-22		
Diaphragm	Hastelloy® C-22		
Nozzle	316 SS		Hastelloy® C-22
Seat	PCTFE (Option: Vespel®)		PCTFE

Dimensions

inch (mm)

AK1400T

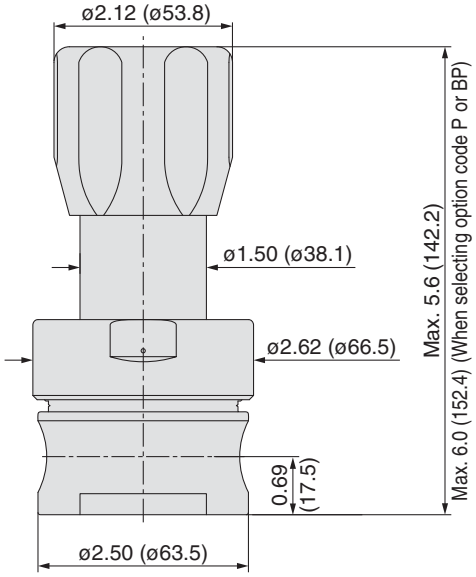

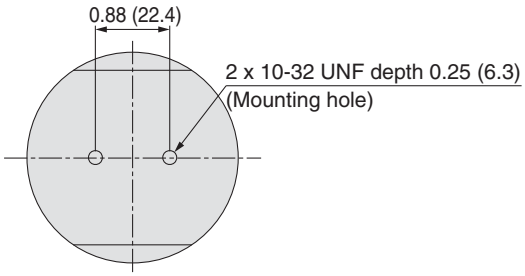

Flow Characteristics

AK1400T

Inlet pressure: ---- 2000 psig (13.8 MPa) ---- 600 psig (4.1 MPa) —— 200 psig (1.4 MPa)

1/2 inch Connection *)

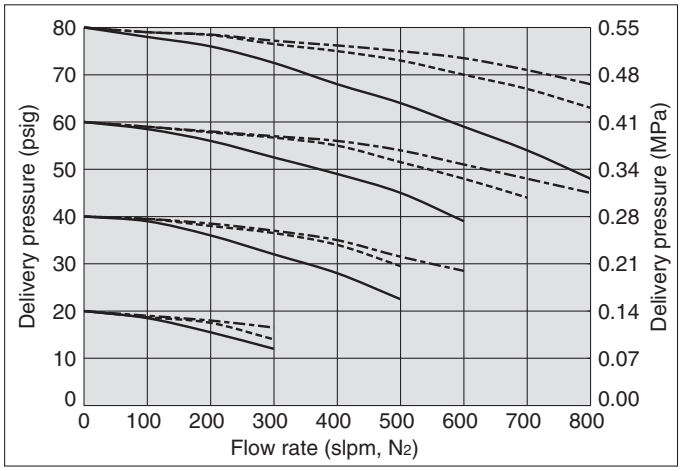

AK1400T

Inlet pressure: ---- 80 psig (0.55 MPa) —— 60 psig (0.41 MPa)

1/2 inch Connection *)

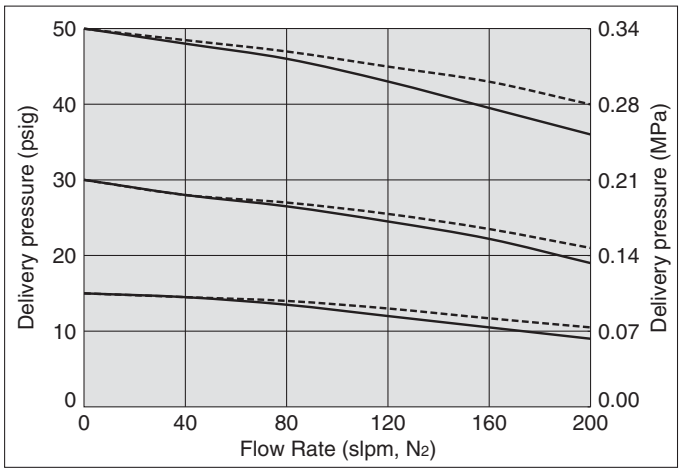

AK1400TA

Inlet pressure: 0 psig (14 kPa)

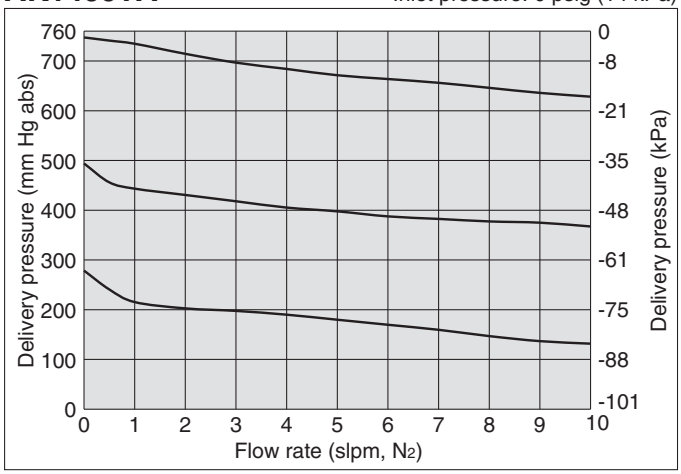

*) If connection size differs, flow characteristics also differ.

Hastelloy® is a registered trademark of Haynes International.
Vespel® is a registered trademark of DuPont.

Single Stage Regulator for General Applications | High flow

Series AK1300

- **Flow capacity to 1000 slpm**
- **Body material: Stainless steel and Brass available**
- **Inlet pressure: Max. 300 psig (2.1 MPa)**

How to Order

Port Number ① ② ③ ④

AK13 02 S 4PL 8 8 0 0

Delivery pressure

Code	Delivery pressure
02	1 to 30 psig (0.007 to 0.2 MPa)
06	2 to 60 psig (0.014 to 0.4 MPa)
10	2 to 100 psig (0.014 to 0.7 MPa)
15	5 to 150 psig (0.034 to 1.0 MPa)

Material

Code	Body	Poppet	Diaphragm
B	Brass	316 SS	Hastelloy® C-22
S	316 SS		

Ports

Code	Ports	Material B	Material S, SH
2P	Refer to the following porting configurations.		●
3P			●
4PL		●	●

Connections (Inlet①, Outlet②)

Code	Connections
4	NPT 1/4 inch
6	NPT 3/8 inch
8	NPT 1/2 inch
4T	1/4 inch compression
6T	3/8 inch compression
8T	1/2 inch compression

Gauge port (Outlet③, ④)

Code	Pressure gauge *1) psig/bar unit	Pressure gauge *1) MPa unit
No code	No gauge port	
0	No pressure gauge (Connections: 1/4 inch NPT)	
V3	-30 in.Hg to 30 psig	-0.1 to 0.2 MPa
1	-30 in.Hg to 100 psig	-0.1 to 0.7 MPa
2	0 to 200 psig	0 to 1.5 MPa

*1) Other range available. Refer to gauge guide (P.94,95).

Sample Order Number

	Port	①	②	③	④	
AK1302S	2P	6	6			
	3P	6	6		V3	MPA
	4PL	6	6	0	V3	MPA

Bonnet option

Code	Bonnet
No code	Standard
P	Panel installation*4)
BP	Bonnet port (NPT 1/8 inch)

*4) Panel mounting hole: dia. 1.56 inch (39.6 mm).

Seat material

Code	Material
No code	PCTFE (Standard)
TF	PTFE *3)

*3) PTFE seats reduce seat abrasion for flow cycle application. Gas permeation is greater with PTFE than PCTFE.

Pressure gauge unit *2)

Code	Unit
No code	psig/bar
MPA	MPa

*2) Pressure gauge unit MPa or psig/bar selectable. However under Japanese regulation, only MPa is available in Japan.

Porting Configuration

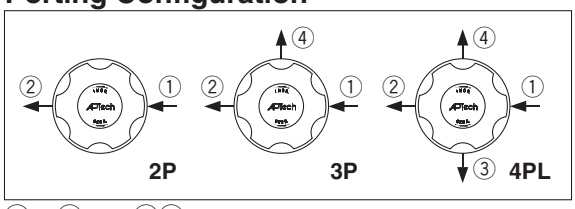

①IN ②OUT ③④Gauge port (Outlet)

Specifications

Operating Parameters	AK1302	AK1306	AK1310	AK1315
Delivery pressure	1 to 30 psig (0.007 to 0.2 MPa)	2 to 60 psig (0.014 to 0.4 MPa)	2 to 100 psig (0.014 to 0.7 MPa)	5 to 150 psig (0.034 to 1.0 MPa)
Gas	Select compatible materials of construction for the gas			
Source pressure	Vacuum to 300 psig (2.1 MPa)			
Proof pressure (Inlet)	450 psig (3.1 MPa)			
Burst pressure	1200 psig (8.3 MPa)			
Ambient and operating temperature	-40 to 71 °C (No freezing)			
Cv	1.1			
Leak rate	1 x 10^{-10} Pa·m³/sec			
Connections	NPT female, Compression			
Supply pressure effect	4.6 psig (0.031 MPa) rise in delivery pressure per 100 psig (0.7 MPa) source pressure drop			
Installation	Bottom mount (Option: panel mount)			
Internal volume	0.65 in³ (10.6 cm³)			
Mass	2.0 kg *			

* Mass, including individual boxed weight, may vary depending on connections or options.

Wetted Parts Material

Wetted Parts	B	S
Body	Brass	316 SS
Poppet	316 SS	
Diaphragm	Hastelloy® C-22	
Seat	PCTFE (Option: PTFE)	

Dimensions

inch (mm)

AK1300

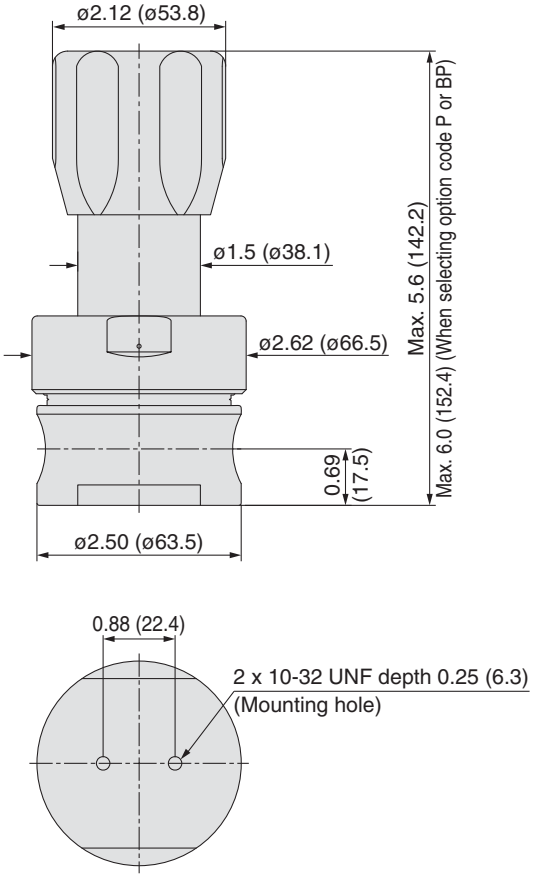

Flow Characteristics

AK1300

Inlet pressure: 150 psig (1.0 MPa) 100 psig (0.69 MPa) 75 psig (0.52 MPa)

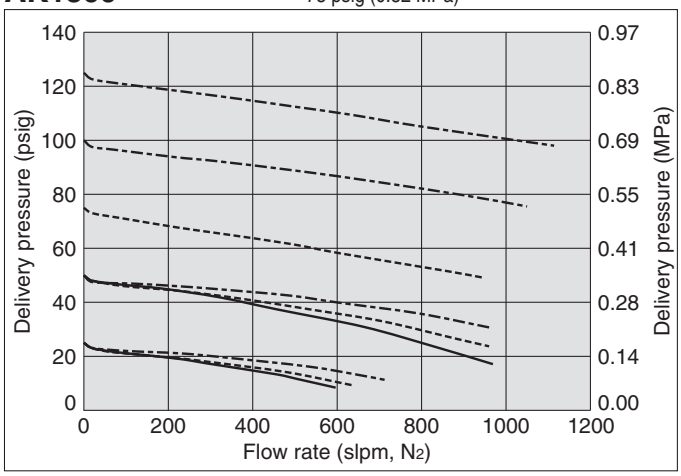

AK1300

Inlet pressure: 75 psig (0.52 MPa) 50 psig (0.34 MPa) 25 psig (0.17 MPa)

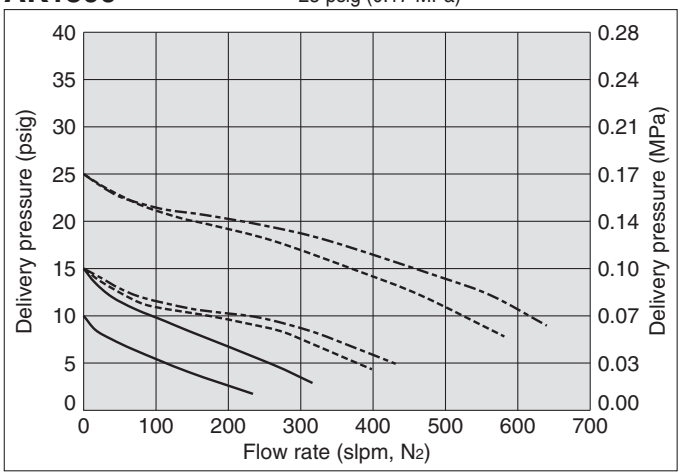

Hastelloy® is a registered trademark of Haynes International.

Single Stage Regulator for General Applications | High flow (Tied-diaphragm)

Series AK1200

- High inlet pressure type Standard: Max. 1700 psig (11.7 MPa)
  HR (option): Max. 3000 psig (20.7 MPa)
- Flow capacity Standard: to 800 slpm
  HF (option): to 1000 slpm
  FC (Option): to 1500 slpm
- Body material: Stainless steel and Brass available
- Hastelloy internals available for corrosion resistance
- Tied-diaphragm design

How to Order

Port Number ① ② ③ ④ ⑤

AK12 02 S 4PL 8 8 0 0 □ □ □ □ □

Delivery pressure

Code	Delivery pressure
02	1 to 30 psig (0.007 to 0.2 MPa)
06	2 to 60 psig (0.014 to 0.4 MPa)
10	2 to 100 psig (0.014 to 0.7 MPa)
15	5 to 150 psig (0.034 to 1.0 MPa)
25	Preset to 250 psig (1.7 MPa)

Material

Code	Body	Poppet	Diaphragm
B	Brass	316 SS	Hastelloy® C-22
S	316 SS		
SH		Hastelloy® C-22	

Ports

Code	Ports	Material B	Material S, SH
2P	Refer to the following porting configurations.		●
3P			●
4PL		●	●
5PC		●	●

Porting Configuration

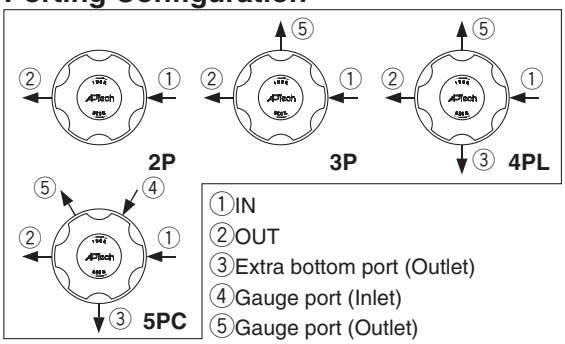

①IN
②OUT
③Extra bottom port (Outlet)
④Gauge port (Inlet)
⑤Gauge port (Outlet)

Connections (Inlet①, Outlet②)

Code	Connections
4	NPT 1/4 inch
6	NPT 3/8 inch
8	NPT 1/2 inch
4T	1/4 inch compression
6T	3/8 inch compression
8T	1/2 inch compression

Gauge port (Extra bottom outlet③, Inlet④, Outlet⑤)

Code	Pressure gauge *1) psig/bar unit	Pressure gauge *1) MPa unit
No code	No gauge port	
0	No pressure gauge (Connections: 1/4 inch NPT)	
V3	-30 in.Hg to 30 psig	-0.1 to 0.2 MPa
1	-30 in.Hg to 100 psig	-0.1 to 0.7 MPa
2	0 to 200 psig	0 to 1.5 MPa
10	0 to 1000 psig	0 to 7 MPa
40	0 to 4000 psig	0 to 28 MPa

*1) Other range available. Refer to gauge guide (P.94,95).

Sample Order Number

	Port	①	②	③	④	④	
AK1202S	2P	8	8				
	3P	8	8			V3	MPA
	4PL	8	8	0		V3	MPA
	5PC	8	8	0	40	V3	MPA

Bonnet option

Code	Bonnet
No code	Standard
P	Panel installation *6)
BP	Bonnet port (NPT 1/8 inch)

*6) Panel mounting hole: dia. 1.56 inch (39.6 mm).

Option

Code	Specification
No code	Standard (Cv: 0.65)
HF	High flow (Cv: 1.1)
FC	Force compensation(Cv: 0.65) *4) *5)
HR	High inlet pressure (Max. inlet pressure 3000 psig (20.7 MPa)) *4)

*4) FC option is not available with AK1202, AK1206 and AK1225.
*5) FC option is available with 1/2 inch NPT or 1/2 inch compression.

Seat material

Code	Material
No code	PCTFE (Standard)
VS	Vespel® *3)

*3) Not available with SH material.

Pressure gauge unit *2)

Code	Unit
No code	psig/bar
MPA	MPa

*2) Pressure gauge unit MPa or psig/bar selectable. However under Japanese regulation, only MPa is available in Japan.

Specifications

Operating Parameters	AK1202	AK1206	AK1210	AK1215	AK1225
Delivery pressure	1 to 30 psig (0.007 to 0.2 MPa)	2 to 60 psig (0.014 to 0.4 MPa)	2 to 100 psig (0.014 to 0.7 MPa)	5 to 150 psig (0.034 to 1.0 MPa) (Source pressure 1000 psig or less) *1)	Preset to 250 psig (1.7 MPa) *2)
Gas	Select compatible materials of construction for the gas				
Source pressure	Vacuum to 1700 psig (11.7 MPa)				
Proof pressure (Inlet)	2550 psig (17.6 MPa)				
Burst pressure	9000 psig (62 MPa)				
Ambient and operating temperature	-40 to 71 °C (No freezing) *3)				
Cv	0.65				
Leak rate	1 x 10^{-10} Pa·m³/sec				
Connections	NPT female, Compression				
Supply pressure effect	3.5 psig (0.024 MPa) rise in delivery pressure per 100 psig (0.7 MPa) source pressure drop				
Installation	Bottom mount (Option: panel mount)				
Internal volume	0.65 in³ (10.6 cm³)				
Mass	2.0 kg *4)				

*1) Source pressure above 1000 psig (6.9 MPa) decreases maximum delivery pressure to less than 150 psig (1 MPa) due to supply pressure effect. When the source pressure is 1700 psig (11.7 MPa), achievable delivery pressure is around 125 psig (0.86 MPa) (HF and FC option 120 psig (0.83 MPa)).
*2) 250 psig outlet pressure preset at 800 psig (5.5MPa) inlet pressure. Custom inlet/outlet pressure settings available. Please contact SMC.
*3) -10 to 90 °C for Vespel® seat. Optional ambient and operating temperature range available. Please contact SMC.
*4) Mass, including individual boxed weight, may vary depending on connections or options.

Options

1.High flow Higher flow capacity with internal changes only, no change in external dimensions. Changes from the standard type are:

Option	Other Parameters	AK1202	AK1206	AK1210	AK1215	AK1225
HF	Cv	1.1				
	Supply pressure effect	4.2 psig (0.029 MPa) rise in delivery pressure per 100 psig (0.7 MPa) source pressure drop				

2. Force compensation Force compensation feature added to HF option and has higher flow capacity than HF option. Changes from the standard type are:

Option	Other Parameters	AK1210	AK1215
FC	Source pressure	Vacuum to 300 psig (2.1 MPa)	
	Cv	0.65	
	Supply pressure effect	4.2 psig (0.029 MPa) rise in delivery pressure per 100 psig (0.7 MPa) source pressure drop	
	Connections	NPT 1/2 inch, 1/2 inch compression	

3. High inlet pressure Changes from the standard type are:

Option	Other Parameters	AK1210	AK1215
HR	Source pressure	Vacuum to 3000 psig (20.7 MPa)	
	Proof pressure (Inlet)	4500 psig (31 MPa)	
	Burst pressure	9000 psig (62 MPa)	

Wetted Parts Material

Wetted Parts	B	S	SH
Body	Brass	316 SS	
Poppet	316 SS		Hastelloy® C-22
Diaphragm	Hastelloy® C-22		
Seat	PCTFE (Option: Vespel®)		PCTFE

Dimensions

inch (mm)

AK1200

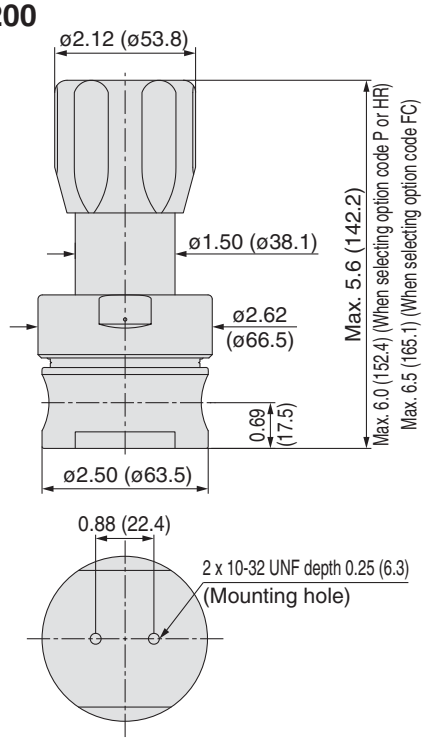

Flow Characteristics

AK1200

Inlet pressure: ---- 1700 psig (11.7 MPa) —— 500 to 1000 psig (3.4 to 6.9 MPa)
1/2 inch connections *)

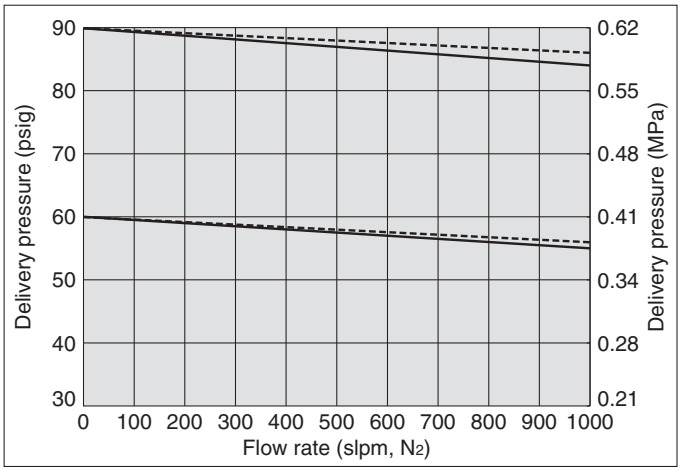

AK1200

Inlet pressure: ---- 80 psig (0.55 MPa) —— 60 psig (0.41 MPa)
1/2 inch connections *)

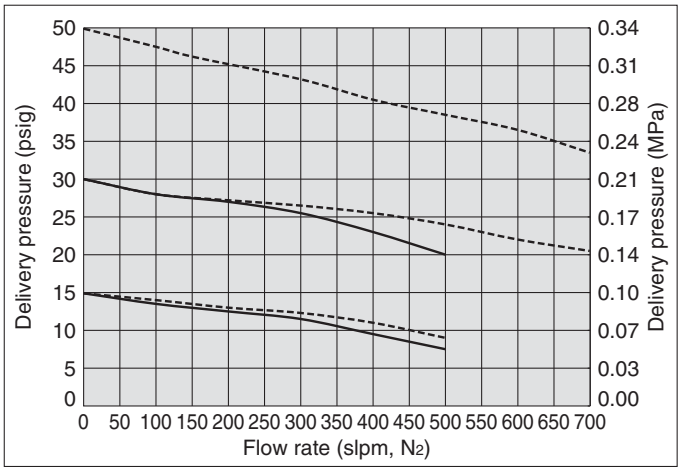

AK1200HF

Inlet pressure: --- 150 psig (1.0 MPa) ---- 100 psig (0.69 MPa)
—— 50 psig (0.34 MPa)

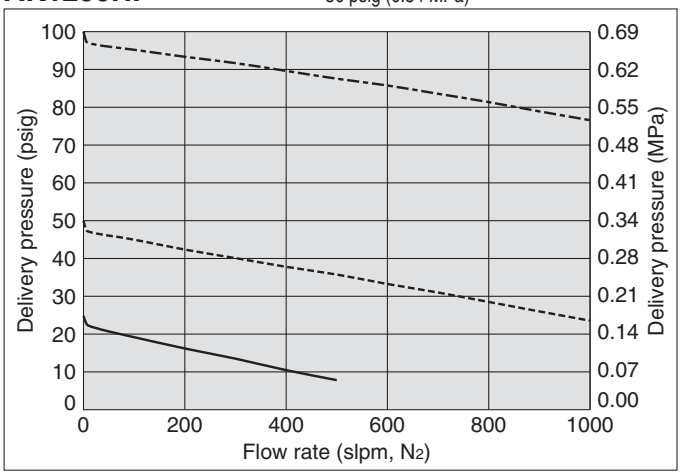

AK1200FC

Inlet pressure: 150 psig (1.0 MPa)
3/4 inch connections *)

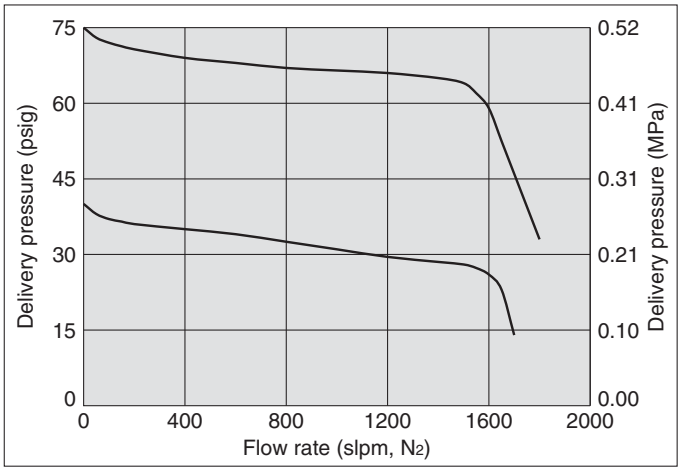

*) If connection size differs, flow characteristics also differ.

Single Stage Regulator for General Applications

High flow (Tied-diaphragm)

Series AK9200

- 3/4 inch port size
- Inlet pressure : Max. 300 psig (2.1 MPa)
- Flow capacity: to 2000 slpm
- Body material: 316 SS

How to Order

AK92 02 S 4PL 1212 0 0 ☐ ☐

Port Number: ① ② ③ ④

Delivery pressure

Code	Delivery pressure
02	1 to 30 psig (0.007 to 0.2 MPa)
06	2 to 60 psig (0.014 to 0.4 MPa)
10	2 to 100 psig (0.014 to 0.7 MPa)
15	5 to 150 psig (0.034 to 1.0 MPa)

Material

Code	Body	Poppet	Diaphragm
S	316 SS	316 SS	Hastelloy® C-22

Ports

Code	Ports
4PL	4 ports

Connections (Inlet①, Outlet②)

Code	Connections
12	NPT 3/4 inch

Gauge port (Outlet③, ④)

Code	Pressure gauge *1)	
	psig/bar unit	MPa unit
0	No pressure gauge (Connections: 1/4 inch NPT)	
V3	-30 in.Hg to 30 psig	-0.1 to 0.2 MPa
1	-30 in.Hg to 100 psig	-0.1 to 0.7 MPa
2	0 to 200 psig	0 to 1.5 MPa

*1) Other range available. Refer to gauge guide (P.94, 95).

Pressure gauge unit *2)

Code	Unit
No code	psig/bar
MPA	MPa

*2) Pressure gauge unit MPa or psig/bar selectable. However under Japanese regulation, only MPa is available in Japan.

Bonnet option

Code	Bonnet
No code	Standard
P	Panel installation *3)
BP	Bonnet port (NPT 1/8 inch)

*3) Panel mounting hole: dia.39.6 mm.

Porting Configuration

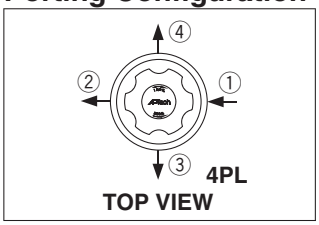

①IN ②OUT ③④Gauge port (Outlet)

Specifications

Operating Parameters	AK9202	AK9206	AK9210	Ak9215
Delivery pressure	1 to 30 psig (0.007 to 0.2 MPa)	2 to 60 psig (0.014 to 0.4 MPa)	2 to 100 psig (0.014 to 0.7 MPa)	5 to 150 psig (0.034 to 1.0 MPa)
Gas	Select compatible materials of construction for the gas			
Source pressure	Vacuum to 300 psig (2.1 MPa)			
Proof pressure (Inlet)	450 psig (3.1 MPa)			
Burst pressure	1500 psig (10.3 MPa)			
Ambient and operating temperature	-40 to 71 °C?(No freezing)			
Cv	1.6			
Leak rate	1 x 10^{-10} Pa·m³/sec			
Connections	NPT 3/4 inch			
Supply pressure effect	7 psig (0.048 MPa) rise in delivery pressure per 100 psig (0.7 MPa) source pressure drop			
Installation	Bottom mount (Option: panel mount)			
Internal volume	2.2 in³ (36 cm³)			

Wetted Parts Material

Wetted Parts	S
Body	316 SS
Nozzle	316 SS
Poppet	316 SS
Diaphragm	Hastelloy® C-22
Seat	PFA

Dimensions

inch (mm)

AK9200

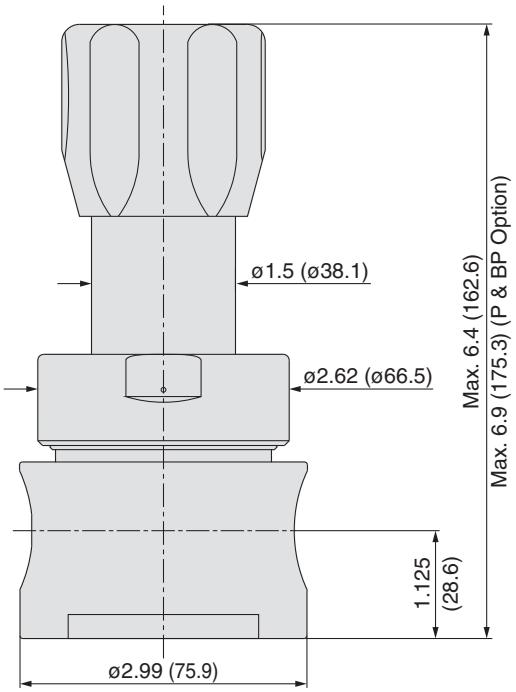

Flow Characteristics

AK9200 Inlet pressure: ---- 150 psig (1.0 MPa) —— 100 psig (0.69 MPa)

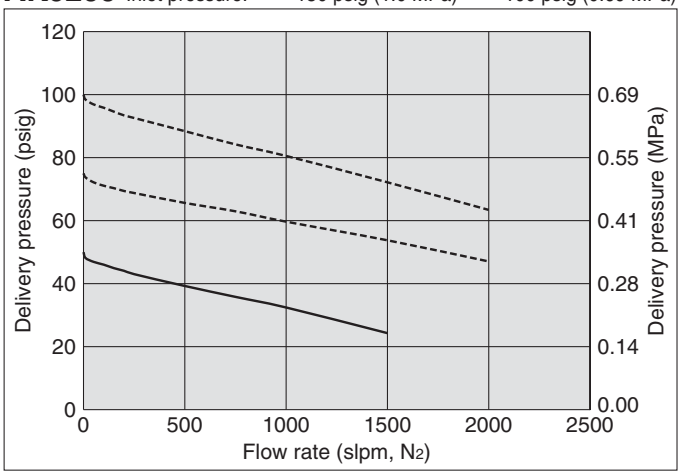

Hastelloy® is a registered trademark of Haynes International.

Two Stage Regulator for General Applications | Low flow (Tied-diaphragm)

Series AK1700

- High inlet pressure type: Max. 3500 psig (24.1 MPa)
- Flow capacity Standard: to 30 slpm
- Body material: Stainless steel and Brass available
- Hastelloy internals available for corrosion resistance
- Minimizes supply pressure effect by two stage regulation
- Tied-diaphragm design

How to Order

AK17 02 S 5PC 4 4 0 0 0 □ □ □ □

Port Number: ① ② ③ ④ ⑤

Delivery pressure

Code	Delivery pressure
02	1 to 30 psig (0.007 to 0.2 MPa)
06	2 to 60 psig (0.014 to 0.4 MPa)
10	2 to 100 psig (0.014 to 0.7 MPa)
20	5 to 200 psig (0.034 to 1.4 MPa)

Material

Code	Body	Poppet	Diaphragm
B	Brass	316 SS	316 SS
S	316 SS		
SH		Hastelloy® C-22	Hastelloy® C-22

Porting configuration

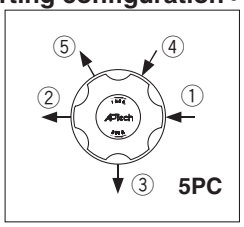

①IN ②OUT
③Extra bottom port (Outlet)
④Gauge port (Inlet)
⑤Gauge port (Outlet)

Connections (Inlet①, Outlet②)

Code	Connections
4	NPT 1/4 inch
4T	1/4 inch compression

Gauge port (Extra bottom outlet③, Inlet④, Outlet⑤)

Code	Pressure gauge *1)	
	psig/bar unit	MPa unit
No code	No gauge port	
0	No pressure gauge (Connections: 1/4 inch NPT)	
V3	-30 in.Hg to 30 psig	-0.1 to 0.2 MPa
1	-30 in.Hg to 100 psig	-0.1 to 0.7 MPa
2	0 to 200 psig	0 to 1.5 MPa
10	0 to 1000 psig	0 to 7 MPa
40	0 to 4000 psig	0 to 28 MPa

*1) Other range available. Refer to gauge guide (P.94,95).

Pressure gauge unit *2)

Code	Unit
No code	psig/bar
MPA	MPa

*2) Pressure gauge unit MPa or psig/bar selectable. However under Japanese regulation, only MPa is available in Japan.

Seat material

Code	Material
No code	PCTFE (Standard)
VS	Vespel® *3)
PK	PEEK

*3) Not available with SH material.

Poppet feature option

Code	Feature
No code	Standard (First and second stage tied diaphragm)
NT	First stage tied, second stage free poppet

Bonnet option

Code	Bonnet
No code	Standard
P	Panel installation *4)

*4) Panel mounting hole: dia. 1.42 inch (36.1 mm).

Specifications

Operating Parameters	AK1702	AK1706	AK1710	AK1720
Delivery pressure	1 to 30 psig (0.007 to 0.2 MPa)	2 to 60 psig (0.014 to 0.4 MPa)	2 to 100 psig (0.014 to 0.7 MPa)	5 to 200 psig (0.034 to 1.4 MPa)
Gas	Select compatible materials of construction for the gas			
Source pressure	Vacuum to 3500 psig (24.1 MPa)			
First stage pressure	175 psig (1.2 MPa)			
Proof pressure (Inlet)	4500 psig (30.7 MPa)			
Burst pressure	8000 psig (55.2 MPa)			
Ambient and operating temperature	-40 to 71 °C (No freezing) *1)			
Cv	0.05			
Leak rate	1 x 10^{-10} Pa·m³/sec			
Connections	NPT female, Compression			
Supply pressure effect	0.05 psig (0.00035 MPa) rise in delivery pressure per 100 psig (0.7 MPa) source pressure drop			
Installation	Option: panel mount			
Internal volume	0.9 in³ (15 cm³)			
Mass	1.95 kg *2)			

*1) -10 to 90 °C for Vespel® and PEEK seat. Optional ambient and operating temperature range available. Please contact SMC.
*2) Mass, including individual boxed weight, may vary depending on connections or options.

Wetted Parts Material

Wetted Parts	B	S	SH
Body	Brass	316 SS	
Poppet	316 SS		Hastelloy® C-22
Diaphragm	316 SS		Hastelloy® C-22
Seat	PCTFE (Option: Vespel®, PEEK)		PCTFE (Option: PEEK)

Dimensions

inch (mm)

AK1700

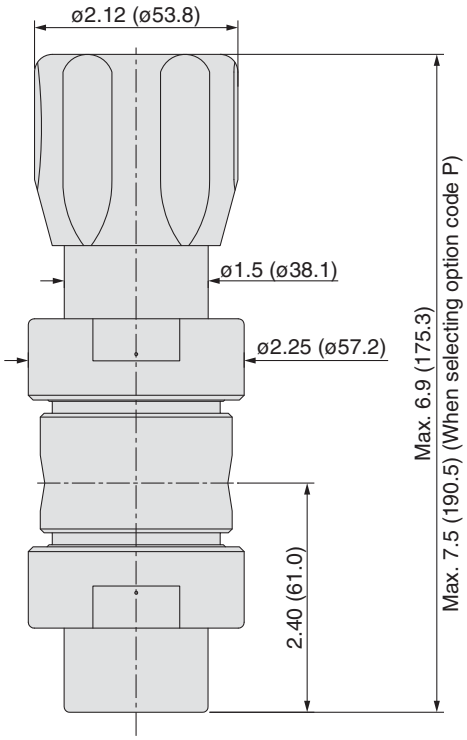

Flow Characteristics

AK1700

Inlet pressure: 200 to 3000 psig (1.4 to 20.7 MPa)

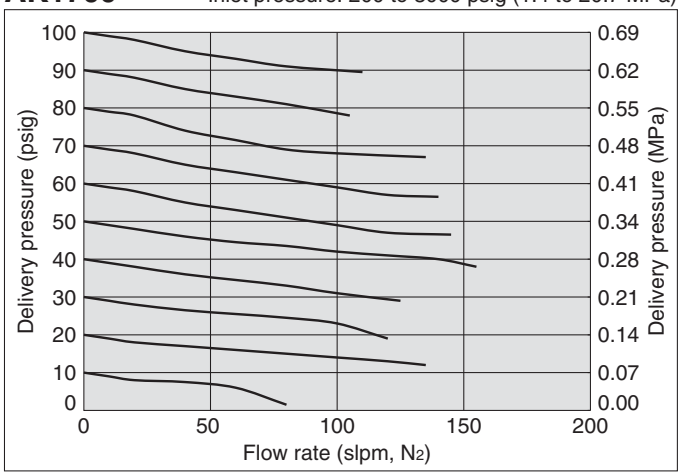

Hastelloy® is a registered trademark of Haynes International.
Vespel® is a registered trademark of DuPont.

Single Stage Regulator

Low flow

Series KT10

- **Inlet pressure : Max. 10000 psig (69 MPa)**
- **Delivery pressure : Max. 10000 psig (69 MPa)**
- **Body material: Stainless steel or brass**
- **Self relieving or non-relieving available***
- **Piston sensing element**

* Self relieving model vents pressure above set point to atmosphere automatically for ease of pressure adjustment and for added safety. Non-relieving model does not vent.

How to Order

KT10 R 1 C 4P 4 0 0 ☐ ☐ ☐ ☐ ☐

(③ ④ = Port Number)

Delivery pressure

Code	Delivery pressure
F	5 to 500 psig (0.034 to 3.4 MPa)
H	5 to 800 psig (0.034 to 5.5 MPa)
J	10 to 1500 psig (0.07 to 10.3 MPa)
L	15 to 2500 psig (0.1 to 17.2 MPa)
N	25 to 4000 psig (0.17 to 27.6 MPa)
P	50 to 6000 psig (0.34 to 41.4 MPa)
R	100 to 10000 psig (0.7 to 69 MPa) *1)

*1) Not available for material code B.

Relieving

Code	Relieving
1	Self Relieving (Standard)
0	Non relieving

Material

Code	Body material
B	Brass
C	300 SS series
S	316 SS

Ports

Code	Ports	Material		
		B	C	S
4P	4 ports	●	●	
4PN	4 ports			●

Installation option

Code	Installation
No code	—
P	Panel installation

Option

Code	Specification
No code	Standard (Cv: 0.06)
HF	High flow (Cv: 0.12)

O-ring material

Code	Material
No code	FKM (Standard)
UE	Polyurethane
BN	Buna-N
EP	Ethylene propylene

Main valve seat material

Code	Material
No code	Vespel® (Standard)
PK	PEEK

Pressure gauge unit *4)

Code	Unit
No code	psig/bar
MPA	MPa

*4) Pressure gauge unit MPa or psig/bar selectable.
However under Japanese regulation, only MPa is available in Japan.

Porting Configuration

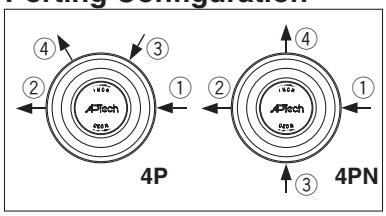

①IN ②OUT ③Gauge port (Inlet)
④Gauge port (Outlet)

Connections (Inlet①, Outlet②)

Code	Connections	Ports	
		4P	4PN
4	NPT 1/4 inch	●	
4B	MS33649		●

Gauge port *2) (Inlet③, Outlet④)

Code	Pressure gauge	
	psig/bar unit	MPa unit
0	No pressure gauge	
6	600 psig/bar *3)	4.1 MPa
10	1000 psig/bar *3)	7 MPa
20	2000 psig/bar *3)	14 MPa
40	4000 psig/bar *3)	28 MPa
60	6000 psig/bar *3)	41 MPa
Q	10000 psig/bar *3)	70 MPa

*2) Pressure gauges are not available with 4B connections.
*3) Under Japan's Measurement Law, this gauge should not be used in Japan.

Specifications

Operating Parameters	KT10F	KT10H	KT10J	KT10L	KT10N	KT10P	KT10R *1)
Delivery pressure	5 to 500 psig (0.034 to 3.4 MPa)	5 to 800 psig (0.034 to 5.5 MPa)	10 to 1500 psig (0.07 to 10.3 MPa)	15 to 2500 psig (0.1 to 17.2 MPa)	25 to 4000 psig (0.17 to 27.6 MPa)	50 to 6000 psig (0.34 to 41.4 MPa)	100 to 10000 psig (0.7 to 69 MPa)
Gas	Select compatible materials of construction for the gas						
Source pressure	SS body (Material code C or S): 69 MPa (10000 psig) *2), Brass body (Material code B): 41.4 MPa (6000 psig)						
Proof pressure	750 psig (5.1 MPa)	1200 psig (8.2 MPa)	2250 psig (15.5 MPa)	3750 psig (25.8 MPa)	6000 psig (41.4 MPa)	9000 psig (62.1 MPa)	15000 psig (103 MPa)
Burst pressure	2000 psig (13.8 MPa)	3200 psig (22 MPa)	6000 psig (41.4 MPa)	10000 psig (69 MPa)	16000 psig (110 MPa)	24000 psig (165 MPa)	40000 psig (276 MPa)
Ambient and operating temperature	-40 to 71 °C (No freezing) *3)						
Cv	0.06						
Leak rate	Bubble tight						
Connections	NPT 1/4 inch, MS33649						
Installation	Option: Panel mount						
Mass	2.3 kg *4)						

*1) Not available for material code B
*2) Source pressure 6000 psig (41.4 MPa) for PEEK seat.
*3) -10 to 90 °C for Vespel® seat.
*4) Mass, including individual boxed weight, may vary depending on connections or options.

Option

High flow

Higher flow capacity with internal chages only, no change in external dimensions. Changes from the standard type are:

Option	Other Parameters	KT10F	KT10H	KT10J	KT10L	KT10N	KT10P	KT10R
HF	**Source pressure**	6000 psig (41.4 MPa)						
	Cv	0.12						

Wetted Parts Material

Wetted Parts	C	B	S
Body	300 SS series	Brass	316 SS
Inlet filter	316 SS	Bronze	316 SS
Piston and trim	300 SS series		
Seat, main valve	Vespel® (Option: PEEK)		
Seat, vent valve	PCTFE		
O ring	FKM (Option: Polyurethane, Buna-N, Ethylene propylene)		
Rings, back up	PTFE		

Dimensions

inch (mm)

KT10

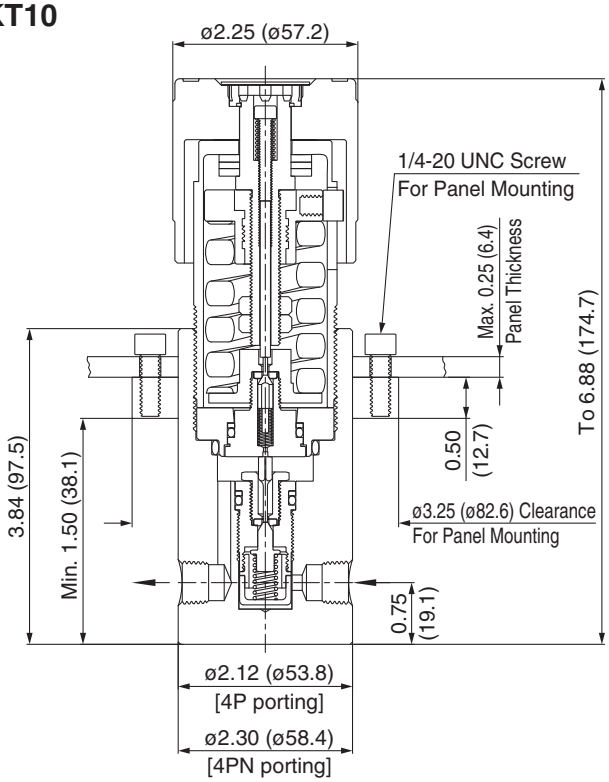

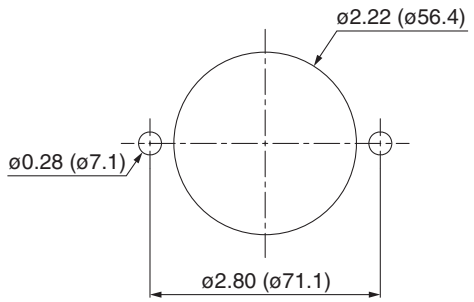

Flow Characteristics

KT10

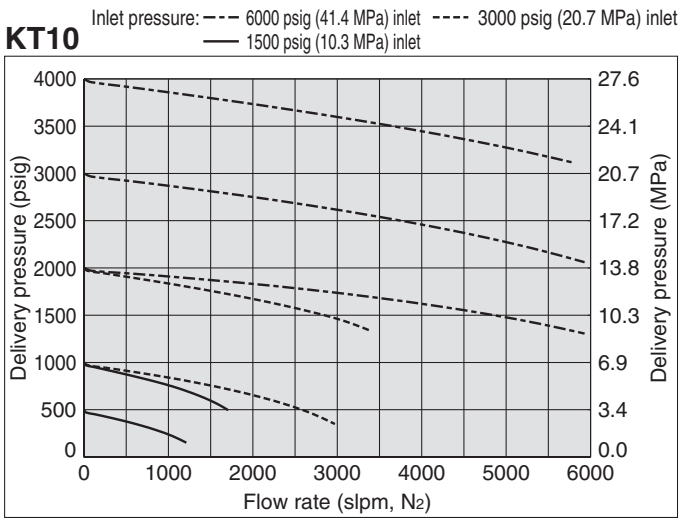

Vespel® is registered trademarks of DuPont.

Single Stage Regulator

Low flow (Welded connection)

Series KT10 Welded connection

- **Inlet pressure : Max. 4000 psig (27.6 MPa)**
- **Delivery pressure : Max. 4000 psig (27.6 MPa)**
- **Body material: 316L SS**
- **Welded connection (Face seal fitting)**
- **Self relieving or non-relieving available***
- **Piston sensing element**

* Self relieving model vents pressure above set point to atmosphere automatically for ease of pressure adjustment and for added safety. Non-relieving model does not vent.

How to Order

KT10 L 1 S 4PW FV4 FV4 0 0 ☐ ☐ ☐ ☐ ☐

Port Number: ① FV4, ② FV4, ③ 0, ④ 0

Delivery Pressure

Code	Delivery pressure
F	5 to 500 psig (0.034 to 3.4 MPa)
H	5 to 800 psig (0.034 to 5.5 MPa)
J	10 to 1500 psig (0.07 to 10.3 MPa)
L	15 to 2500 psig (0.1 to 17.2 MPa)
N	25 to 4000 psig (0.17 to 27.6 MPa)

Relieving

Code	Relieving
1	Self Relieving (Standard)
0	Non relieving

Material

Code	Body
S	316L SS

Ports

Code	Ports
4PW	4 ports

Porting configuration

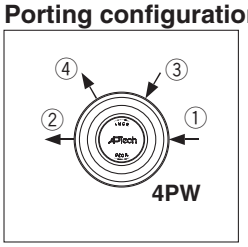

①IN ②OUT
③Gauge port (Inlet)
④Gauge port (Outlet)

Connections (Inlet①, Outlet②)

Code	Connections
FV4	1/4 inch face seal (female)
MV4	1/4 inch face seal (male)

Gauge port (Inlet③, Outlet④)

Code	Pressure gauge	
	psig/bar unit	MPa unit
0	No pressure gauge (Connections: 1/4 inch face seal male)	
6	600 psig/bar *1)	4.1 MPa
10	1000 psig/bar *1)	7 MPa
20	2000 psig/bar *1)	14 MPa
40	4000 psig/bar *1)	28 MPa

*1) Under Japanese Measurement Law, this gauge should not be used in Japan.

Pressure gauge unit *2)

Code	Unit
No code	psig/bar
MPA	MPa

*2) Pressure gauge unit MPa or psig/bar selectable. However under Japanese regulation, only MPa is available in Japan.

Main valve seat material

Code	Material
No code	Vespel® (Standard)
PK	PEEK

O-ring Material

Code	Material
No code	FKM (Standard)
UE	Polyurethane
BN	Buna-N
EP	Ethylene propylene

Option

Code	Specification
No code	Standard (Cv: 0.06)
HF	High flow (Cv: 0.12)

Installation option

Code	Installation
No code	Bottom mount (Standard)
P	Panel Installation

Specifications

Operating Parameter	KT10F	KT10H	KT10J	KT10L	KT10N
Delivery pressure	5 to 500 psig (0.034 to 3.4 MPa)	5 to 800 psig (0.034 to 5.5 MPa)	10 to 1500 psig (0.07 to 10.3 MPa)	15 to 2500 psig (0.1 to 17.2 MPa)	25 to 4000 psig (0.17 to 27.6 MPa)
Gas	Select compatible materials of construction for the gas				
Source pressure	27.6 MPa (4000 psig)				
Proof pressure	750 psig (5.1 MPa)	1200 psig (8.2 MPa)	2250 psig (15.5 MPa)	3750 psig (25.8 MPa)	6000 psig (41.4 MPa)
Burst pressure	2000 psig (13.8 MPa)	3200 psig (22 MPa)	6000 psig (41.4 MPa)	10000 psig (69 MPa)	16000 psig (110 MPa)
Ambient and operating temperature	-40 to 71 °C (No freezing) *1)				
Cv	0.06				
Leak rate	Bubble tight				
Connections	1/4 inch face seal				
Installation	Bottom mount (Option: panel mount)				
Mass	2.3kg *2)				

*1) -10 to 90 °C for Vespel® and PEEK seat. Optional ambient and operating temperature range available. Please contact SMC.
*2) Mass, including individual boxed weight, may vary depending on connections or options.

Option

High flow

Higher flow capacity with internal changes only, no change in external dimensions.

Option	Other Parameters	KT10F	KT10H	KT10J	KT10L	KT10N
HF	**Cv**	0.12				

Wetted Parts Material

Wetted Parts	S
Body	316L SS
Surface finish	Electropolish + Passivation
Inlet filter	316 SS
Piston and trim	300 SS series
Seat, main valve	Vespel® (Option: PEEK)
Seat, vent valve	PCTFE
O-ring	FKM (Option:Polyurethan, Buna-N, Ethylene propylene)
Rings, back up	PTFE

Dimensions

inch (mm)

KT10

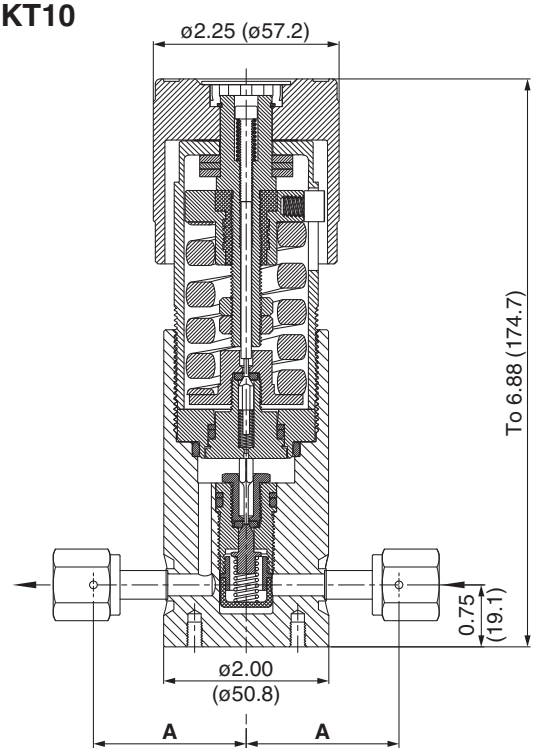

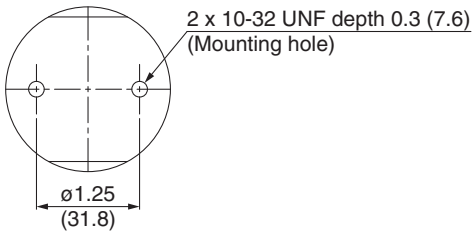

Flow Characteristics

KT10 (Welded Connections)

Inlet pressure: ---- 1500 psig (10.3 MPa) —— 3000 psig (20.7 MPa)

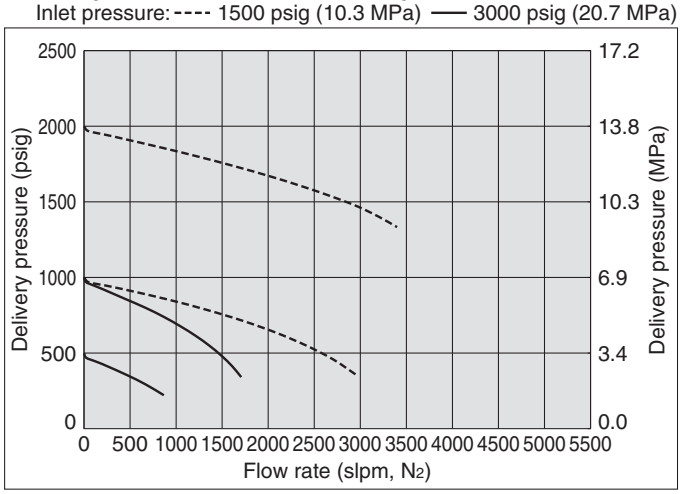

Vespel® is registered trademarks of DuPont.

Single Stage Regulator

High flow

Series KT12

- **Inlet pressure : Max. 6000 psig (41.4 MPa)**
- **Delivery pressure : Max. 2500 psig (17.2 MPa)**
- **Body material: Stainless steel or brass**
- **Self relieving or non-relieving available***
- **Piston sensing element**

* Self relieving model vents pressure above set point to atmosphere automatically for ease of pressure adjustment and for added safety. Non-relieving model does not vent.

How to Order

KT12 L 1 C 4P 8 ③ ④ □ □ □

Port Number: ③ ④

Delivery pressure

Code	Delivery pressure
B	5 to 120 psig (0.034 to 0.83 MPa)
E	5 to 300 psig (0.034 to 2.1 MPa)
G	5 to 600 psig (0.034 to 4.1 MPa)
I	10 to 1000 psig (0.07 to 6.9 MPa)
J	15 to 1500 psig (0.1 to 10.3 MPa)
L	25 to 2500 psig (0.17 to 17.2 MPa)

Relieving

Code	Relieving
1	Self Relieving (Standard)
0	Non relieving

Material

Code	Body materaial
B	Brass
C	300 SS series

Ports

Code	Ports
2P	2 ports
4P	4 ports
4PQ	4 ports (Reverse port)

Connections

Code	Connections
8	NPT 1/2 inch
12	NPT 3/4 inch

Installation option

Code	Installation
No code	Bottom mount (Standard)
P	Panel Installation

Option

Code	Specification
No code	Standard (Cv: 0.8)
HF	High flow (Cv:2.0)

Pressure gauge unit *2)

Code	Unit
No code	psig/bar
MPA	MPa

*2) Pressure gauge unit MPa or psig/bar selectable. However under Japanese regulation, only MPa is available in Japan.

Gauge port (Inlet③, Outlet④)

Code	Pressure gauge	
	psig/bar unit	MPa unit
No code	No gauge port	
0	No pressure gauge (Connections: 1/4 inch NPT)	
4	400 psig/bar*1)	2.7 MPa
6	600 psig/bar *1)	4.1 MPa
10	1000 psig/bar*1)	7 MPa
20	2000 psig/bar*1)	14 MPa
40	4000 psig/bar*1)	28 MPa
60	6000 psig/bar*1)	41 MPa

*1) Under Japanese Measurement Law, this gauge should not be used in Japan.

Porting Configuration

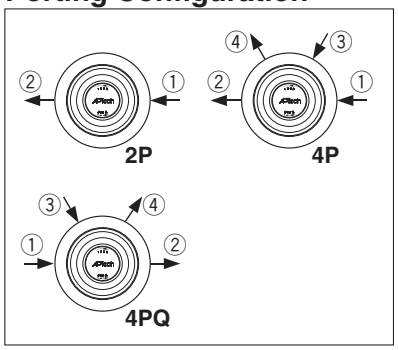

①IN ②OUT ③Gauge port (Inlet)
④Gauge port (Outlet)

Specifications

Operating Parameters	KT12B	KT12E	KT12G	KT12I	KT12J	KT12L
Delivery pressure	5 to 120 psig (0.034 to 0.83 MPa)	5 to 300 psig (0.034 to 2.1 MPa)	5 to 600 psig (0.034 to 4.1 MPa)	10 to 1000 psig (0.07 to 6.9 MPa)	15 to 1500 psig (0.1 to 10.3 MPa)	25 to 2500 psig (0.17 to 17.2 MPa)
Gas	Select compatible materials of construction for the gas					
Source pressure	SS body (Material code C): 41.4 MPa (6000 psig), Brass body (Material code B): 34.5 MPa (5000 psig)					
Proof pressure	180 psig (1.2 MPa)	450 psig (3.1 MPa)	900 psig (6.2 MPa)	1500 psig (10.3 MPa)	2250 psig (15.5 MPa)	3750 psig (25.8 MPa)
Burst pressure	480 psig (3.3 MPa)	1200 psig (8.2 MPa)	2400 psig (16.5 MPa)	4000 psig (27.6 MPa)	6000 psig (41.4 MPa)	10000 psig (69 MPa)
Ambient and operating temperature	-40 to 71 °C (No freezing)					
Cv	0.8					
Leak rate	Bubble tight					
Connections	NPT female					
Installation	Bottom mount (Option: panel mount)					
Mass	3.6kg *1)					

*1) Mass, including individual boxed weight, may vary depending on connections or options.

Option

High flow

Higher flow capacity with internal changes only, no change in external dimensions. Changes from the standard type are:

Option	Other Parameters	KT12B	KT12E	KT12G	KT12I	KT12J	KT12L
HF	**Cv**	2.0					

Wetted Parts Material

Wetted Parts	C	B
Body	300 SS series	Brass
Piston and trim	300 SS series	
Seat, main valve	PCTFE	
Seat, vent valve	PCTFE	
O-ring	FKM	
Rings, back up	PTFE	

Dimensions

inch (mm)

KT12

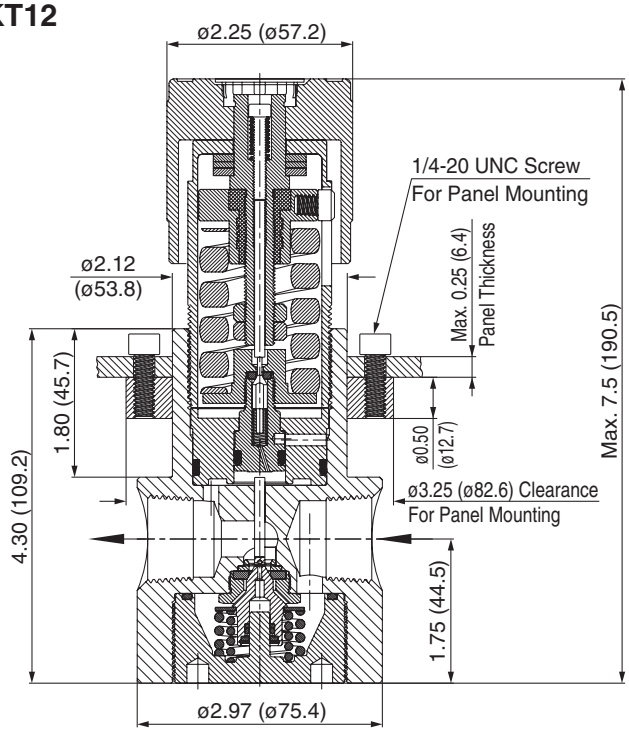

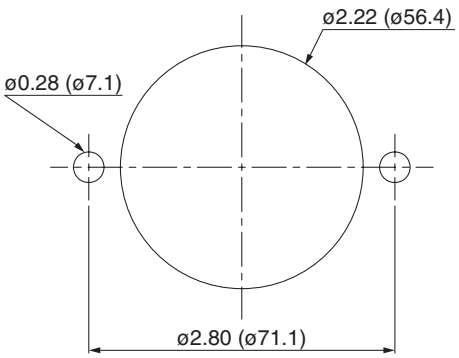

Flow Characteristics

KT12

Inlet pressure: ---- 2000 psig (13.8 MPa) —— 1000 psig (6.9 MPa)

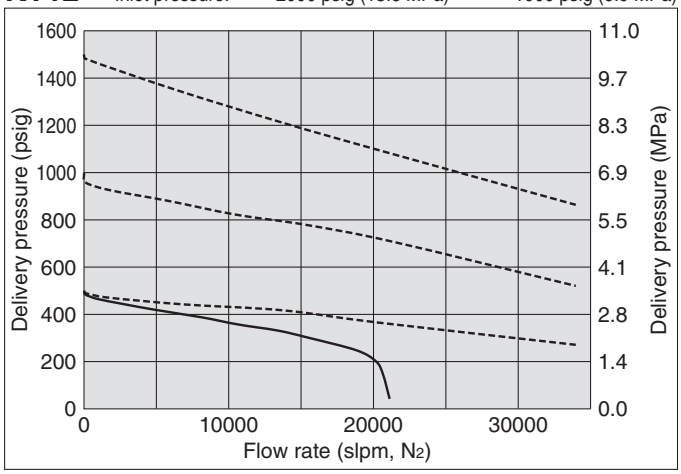

KT12HF

Inlet pressure: ---- 2000 psig (13.8 MPa) —— 1000 psig (6.9 MPa)

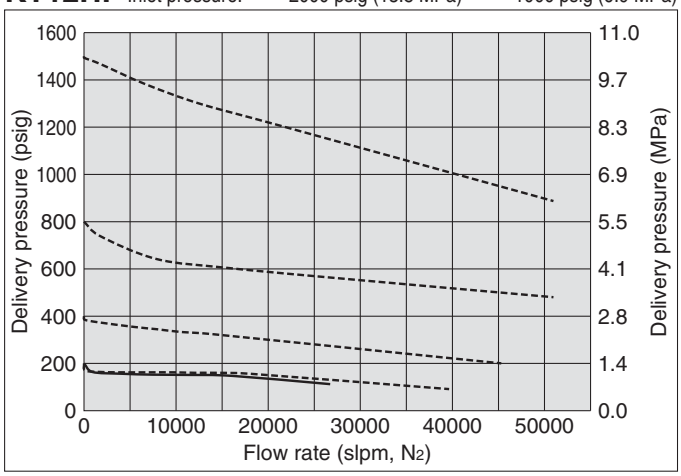

Back Pressure Regulator for General Applications

Series BP1000

- **Operating pressure: 0.5 to 300 psig (0.0034 to 2.1 MPa)**
- **Body material: Stainless steel and Brass available**
- **Hastelloy internals available for corrosion resistance**

How to Order

BP10 01 S 4PL 4 4 0 0

Port Number: ① ② ③ ④

Operating pressure

Code	pressure
01	0.5 to 10 psig (0.0034 to 0.07 MPa)
02	1 to 30 psig (0.007 to 0.2 MPa)
06	2 to 60 psig (0.014 to 0.4 MPa)
10	5 to 100 psig (0.034 to 0.7 MPa)
20	15 to 200 psig (0.1 to 1.4 MPa)
30	15 to 300 psig (0.1 to 2.1 MPa)

Material

Code	Body	Nozzle	Diaphragm
B	Brass	316 SS	316 SS
S	316 SS		
SH		Hastelloy® C-22	Hastelloy® C-22

Ports

Code	Ports	Material B	Material S, SH
2P	Please refer to the following porting configurations.		●
4PL		●	●

Porting Configuration

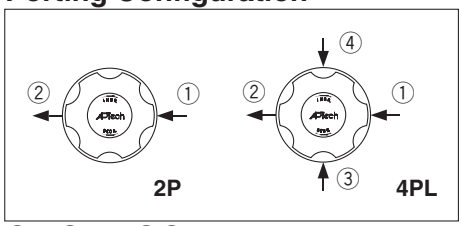

①IN ②OUT ③④Gauge port (Inlet)

Connections (Inlet①, Outlet②)

Code	Connections
4	NPT 1/4 inch
4T	1/4 inch compression

Gauge port (Inlet③, ④)

Code	Pressure gauge *1) psig/bar unit	Pressure gauge *1) MPa unit
No code	No gauge port	
0	No pressure gauge (Connections: 1/4 inch NPT)	
V3	-30 in.Hg to 30 psig	-0.1 to 0.2 MPa
1	-30 in.Hg to 100 psig	-0.1 to 0.7 MPa
2	0 to 200 psig	0 to 1.5 MPa
10	0 to 1000 psig	0 to 7 MPa

*1) Other range available. Refer to gauge guide (P.94).

Sample Order Number

			Port			③	④	⑤	
BP10	01	S	2P	4	4				
			4PL	4	4	0		1	MPA

Bonnet option

Code	Bonnet
No code	Standard
P	Panel installation *3)

*3) Panel mounting hole: dia. 1.42 inch (36.1 mm).

Seat material

Code	Material
No code	FKM (Standard)
TF	PTFE
KZ	FFKM

Pressure gauge unit *2)

Code	Unit
No code	psig/bar
MPA	MPa

*2) Pressure gauge unit MPa or psig/bar selectable. However under Japanese regulation, only MPa is available in Japan.

Specifications

Operating Parameters	BP1001	BP1002	BP1006	BP1010	BP1020	BP1030
Operating pressure	0.5 to 10 psig (0.0034 to 0.07 MPa)	1 to 30 psig (0.007 to 0.2 MPa)	2 to 60 psig (0.014 to 0.4 MPa)	5 to 100 psig (0.034 to 0.7 MPa)	15 to 200 psig (0.1 to 1.4 MPa)	15 to 300 psig (0.1 to 2.1 MPa)
Gas	Select compatible materials of construction for the gas					
Proof pressure (Inlet)	15 psig (0.105 MPa)	45 psig (0.3 MPa)	90 psig (0.6 MPa)	150 psig (1.05 MPa)	300 psig (2.1 MPa)	450 psig (3.15 MPa)
Burst pressure	30 psig (0.2 MPa)	90 psig (0.6 MPa)	180 psig (1.2 MPa)	300 psig (2.1 MPa)	600 psig (4.1 MPa)	900 psig (6.2 MPa)
Ambient and operating temperature	-10 to 71 °C (No freezing) *1)					
Cv	0.3					
Leak rate	1 x 10^{-10} Pa·m³/sec					
Connections	NPT female, Compression					
Installation	Bottom mount (Option: panel mount)					
Internal volume	0.49 in³ (8 cm³)					
Mass	1.2 kg *2)					

*1) -30 to 71 °C for PTFE seat. Optional ambient and operating temperature range available. Please contact SMC.
*2) Mass, including individual boxed weight, may vary depending on connections or options.

Wetted Parts Material

Wetted Parts	B	S	SH
Body	Brass	316 SS	
Diaphragm	316 SS		Hastelloy® C-22
Nozzle	316 SS		Hastelloy® C-22
Seat	FKM (Option: PTFE, FFKM)		
Seal	PTFE		

Dimensions

BP1000

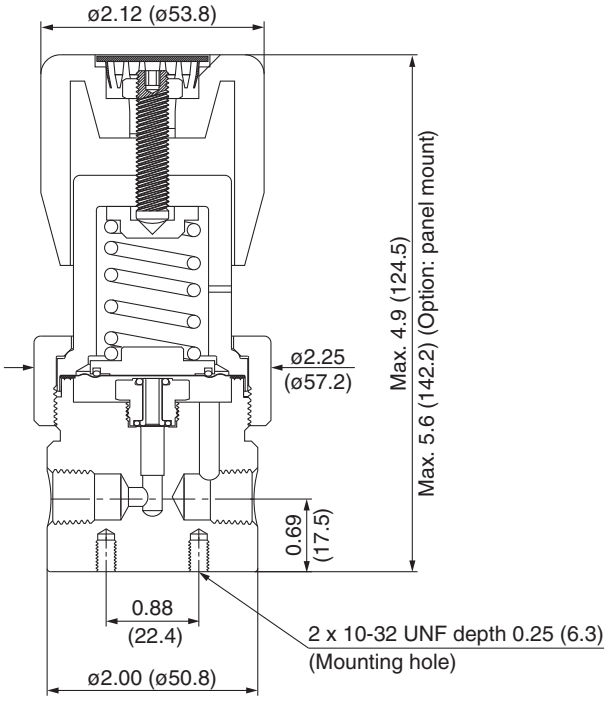

Flow Characteristics

BP1000

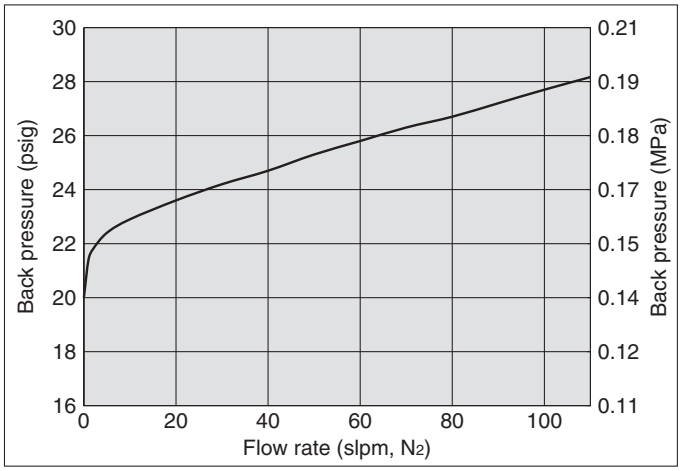

Hastelloy® is a registered trademark of Haynes International.

Welded Connection Series Back Pressure Regulator for Ultra High Purity

Series BP1000

- For UHP gas delivery
- Operating pressure: 0.5 to 300 psig (0.0034 to 2.1 MPa)
- Body material: 316L SS secondary remelt
- Hastelloy internals available for corrosion resistance

How to Order

Port Number ① ② ③

BP10 01 S 2PW FV4 FV4

Operating pressure

Code	Pressure
01	0.5 to 10 psig (0.0034 to 0.07 MPa)
02	1 to 30 psig (0.007 to 0.2 MPa)
10	5 to 100 psig (0.034 to 0.7 MPa)
20	15 to 200 psig (0.1 to 1.4 MPa)
30	15 to 300 psig (0.1 to 2.1 MPa)

Material

Code	Body	Nozzle	Diaphragm
S	316L SS	316L SS	
SH	secondary remelt	Hastelloy® C-22	

Surface finish

Code	Surface finish Ra max
No code	15 µin. (0.4 µm) Standard
M	10 µin. (0.25 µm)
V	7 µin. (0.18 µm)
X	5 µin. (0.13 µm)

Ports

Code	Ports
2PW	2 ports
3PW	3 ports

Connections (Inlet①, Outlet②)

Code	Connections
FV4	1/4 inch face seal (Female)
MV4	1/4 inch face seal (Male)
TW4	1/4 inch tube weld
FV6	3/8 inch face seal (Female)
MV6	3/8 inch face seal (Male)
TW6	3/8 inch tube weld

Gauge port (Inlet③)

Code	Pressure gauge *1)	
	psig/bar unit	MPa unit
No code	No gauge port	
0	No pressure gauge	
V3	-30 in.Hg to 30 psig	-0.1 to 0.2 MPa
L	-30 in.Hg to 60 psig	-0.1 to 0.4 MPa
1	-30 in.Hg to 100 psig	-0.1 to 0.7 MPa
H	-30 in.Hg to 160 psig	-0.1 to 1.1 MPa
2	0 to 200 psig	0 to 1.4 MPa
4	0 to 400 psig	0 to 3 MPa

*1) Other range available. Refer to gauge guide (P.94).

Bonnet option

Code	Bonnet
No code	Standard
P	Panel Installation *3)

*3) Panel mounting hole: dia. 1.42 inch (36.1 mm).

Seat material

Code	Material
No code	FKM (Standard)
TF	PTFE
KZ	FFKM

Pressure gauge unit *2)

Code	Unit
No code	psig/bar
MPA	MPa

*2) Pressure gauge unit MPa or psig/bar selectable. However under Japanese regulation, only MPa is available in Japan.

Porting Configuration

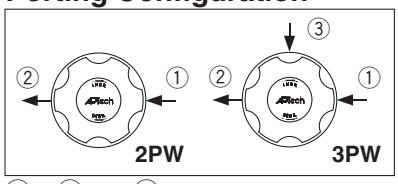

①IN ②OUT ③Gauge port (Inlet)

Sample Order Number

			Port			③	
BP10	01	S	2PW	FV4	FV4		
			3PW	FV4	FV4	V3	MPA

Specifications

Operating Parameters		BP1001	BP1002	BP1010	BP1020	BP1030
Operating pressure		0.5 to 10 psig (0.0034 to 0.07 MPa)	1 to 30 psig (0.007 to 0.2 MPa)	5 to 100 psig (0.034 to 0.7 MPa)	15 to 200 psig (0.1 to 1.4 MPa)	15 to 300 psig (0.1 to 2.1 MPa)
Gas		Select compatible materials of construction for the gas				
Proof pressure (Inlet)		15 psig (0.105 MPa)	45 psig (0.3 MPa)	150 psig (1.05 MPa)	300 psig (2.1 MPa)	450 psig (3.15 MPa)
Burst pressure		30 psig (0.2 MPa)	90 psig (0.6 MPa)	300 psig (2.1 MPa)	600 psig (4.1 MPa)	900 psig (6.2 MPa)
Ambient and operating temperature		-10 to 71 °C (No freezing) *1)				
Cv		0.3				
Leak rate	Inboard leakage	2×10^{-11} Pa·m³/sec				
	Outboard leakage	2×10^{-10} Pa·m³/sec He				
Across the seat leak		Bubble tight				
Surface finish		Ra ma x 15 µin. (0.4 µm) Option: 10 µin. (0.25 µm), 7 µin. (0.18 µm), 5 µin. (0.13 µm)				
Connections		Face seal, Tube weld				
Installation		Bottom mount (Option: panel mount)				
Internal volume		0.49 in³ (8 cm³)				
Mass		1.2 kg *2)				

*1) -30 to 71 °C for PTFE seat. Optional ambient and operating temperature range available. Please contact SMC.
*2) Mass, including individual boxed weight, may vary depending on connections or options.

Wetted Parts Material

Wetted Parts	S	SH
Body	316L SS secondary remelt	
Diaphragm	316L SS	Hastelloy® C-22
Nozzle	316L SS	Hastelloy® C-22
Seat	FKM (Option: PTFE, FFKM)	
Seal	PTFE	

Dimensions

inch (mm)

BP1000

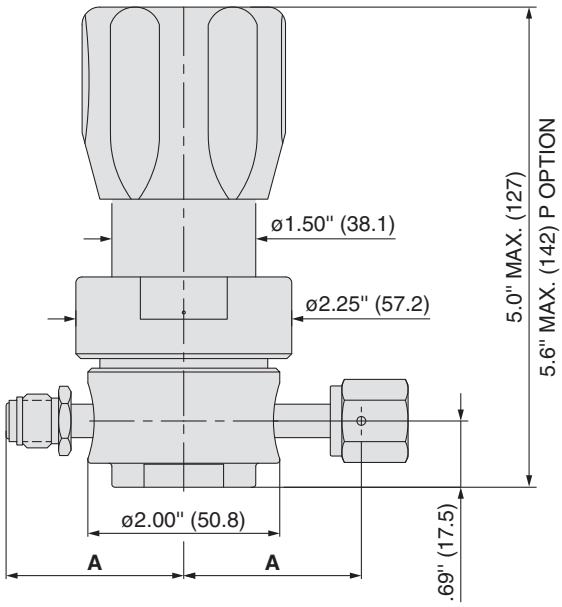

Connections	A	
	in	mm
FV4	1.85 ± 01	47.0
MV4		
FV6	2.35 ± 01	59.7
MV6		

Flow Characteristics

BP1000

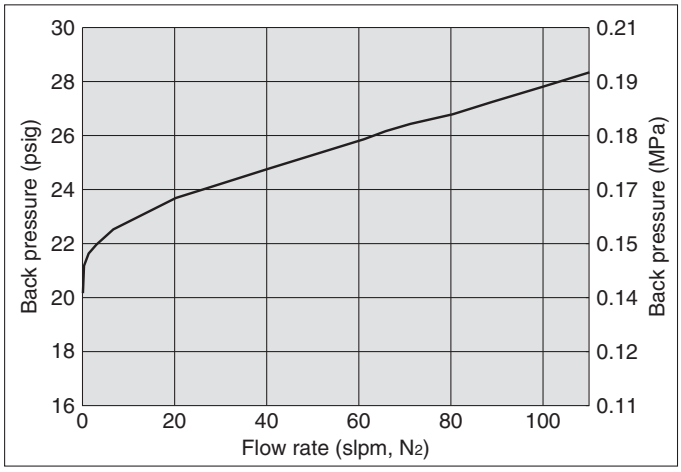

Hastelloy® is a registered trademark of Haynes International.

Pneumatic Actuation Pressure Regulator | Low flow

Series AP10PA

- **Actuation control pressure isolated from process gas by two seals**
- **Body material: 316L SS secondary remelt**
- **High inlet pressure type: Max. 3500 psig (24.1 MPa)**
- **Flow capacity Standard: to 30 slpm**
  HF (Option): to 120 slpm
- **Hastelloy internals available for corrosion resistance**
- **100 psig (0.69 MPa) outlet pressure achievable with 80 psig (0.55 MPa) control pressure or less**

How to Order

AP10 PA S [ ] 2PW FV4 FV4 [ ] [ ] [ ] [ ] [ ]

Port Number: ① ② ③ ④

Delivery pressure

Code	Delivery pressure
PA	7 to 150 psig (0.05 to 1.0 MPa)

Material

Code	Body	Poppet	Diaphragm	Nozzle
S	316L SS secondary remelt	316L SS	316L SS	316L SS
SHP		Hastelloy® C-22	Hastelloy® C-22	
SH				Hastelloy® C-22
H	Hastelloy® C-22			

Surface finish

Code	Surface finish Ra max
No code	15 µin. (0.4 µm) Standard
M	10 µin. (0.25 µm)
V	7 µin. (0.18 µm)
X	5 µin. (0.13 µm)

Ports

Code	Ports
2PW	2 ports
3PW	3 ports
4PW	4 ports

Porting Configuration (Top view)

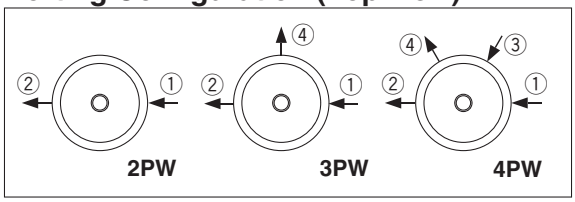

①IN ②OUT ③Gauge port (Inlet) ④Gauge port (Outlet)

Connections (Inlet①, Outlet②)

Code	Connections
FV4	1/4 inch face seal (Female)
MV4	1/4 inch face seal (Male)
TW4	1/4 inch tube weld
FV6	3/8 inch face seal (Female)
MV6	3/8 inch face seal (Male)
TW6	3/8 inch tube weld

Gauge port (Inlet③, Outlet④)

Code	Pressure gauge *1)	
	psig/bar unit	MPa unit
No code	No gauge port	
0	No pressure gauge (Connections: 1/4 inch face seal male)	
V3	-30 in.Hg to 30 psig	-0.1 to 0.2 MPa
L	-30 in.Hg to 60 psig	-0.1 to 0.4 MPa
1	-30 in.Hg to 100 psig	-0.1 to 0.7 MPa
2	0 to 200 psig	0 to 1.4 MPa
4	0 to 400 psig	0 to 3 MPa
10	0 to 1000 psig	0 to 7 MPa
40	0 to 4000 psig	0 to 28 MPa

*1) Refer to gauge guide (P.94) for gauge specifications.

Option

Code	Specification
No code	Standard (Cv:0.09)
HF	High flow (Cv:0.15) *6)

*6) Full outlet pressure rating may not be achieved at all inlet pressure.

Seat material

Code	Material
No code	PCTFE (Standard)
VS	Vespel® *3)
TF	PTFE *4) *5)

*3) Not available with SHP, SH, H materials.
*4) Source pressure rating is limited to 300psig (2.1MPa) or less.
*5) PTFE seats reduce seat abrasion for flow cycle application. Gas permeation is greater with PTFE than PCTFE.

Pressure gauge unit *2)

Code	Unit
No code	psig/bar
MPA	MPa

*2) Pressure gauge unit MPa or psig/bar selectable. However under Japanese regulation, only MPa is available in Japan.

Specifications

Operating Parameters		AP10PA
Delivery pressure		7 to 150 psig (0.05 to 1.0 MPa)
Gas		Select compatible materials of construction for the gas
Source pressure		Vacuum to 3500 psig (24.1 MPa) *1)
Proof pressure (Inlet)		5000 psig (34.5 MPa)
Burst pressure		10000 psig (69 MPa)
Maximum control pressure		150 psig (1.0 MPa)
Ambient and operating temperature		-40 to 71 °C (No freezing) *2)
Cv		0.09
Leak rate	Inboard leakage	2×10^{-11} Pa·m³/sec
	Outboard leakage	2×10^{-10} Pa·m³/sec *3)
Across the seat leak		4×10^{-9} Pa·m³/sec *4)
Surface finish		Ra max 15 µin. (0.4 µm) Option: 10 µin. (0.25 µm), 7 µin. (0.18 µm), 5 µin. (0.13 µm)
Connections		Face seal, Tube weld
Control pressure port		NPT 1/8 inch
Bonnet port		NPT 1/8 inch
Supply pressure effect		0.38 psig (0.0026 MPa) rise in delivery pressure per 100 psig (0.7 Mpa) source pressure drop
Installation		Bottom mount
Internal volume		0.49 in³ (8 cm³)

*1) Max. 300 psig (2.1 MPa) for PTFE seat.
*2) -10 to 90 °C for Vespel® seat.
*3) Tested with Helium gas inlet pressure 1500 psig (10.5 MPa).
*4) Tested with Helium gas inlet pressure 1000 psig (7 MPa).

Option

High flow

Higher flow capacity with internal changes only, no change in external dimensions. Changes from the standard type are:

Option	Other Parameters	AP10PA
HF	**Delivery pressure**	7 to 150 psig (0.05 to 1.0 MPa) *)
	Cv	0.15
	Supply pressure effect	0.75 psig (0.0052 MPa) rise in delivery pressure per 100 psig (0.7 MPa) source pressure drop

*) HF option will not achieve rated outlet pressure at all inlet pressures.

Wetted Parts Material

Wetted Parts	S	SHP	SH	H
Body	316L SS secondary remelt			Hastelloy® C-22
Surface finish	Electropolish + Passivation			Electropolish
Poppet	316L SS	Hastelloy® C-22		
Diaphragm	316L SS	Hastelloy® C-22		
Nozzle	316L SS		Hastelloy® C-22	
Seat	PCTFE (Option: Vespel®, PTFE)	PCTFE (Option: PTFE)		

Dimensions

inch (mm)

AP10PA

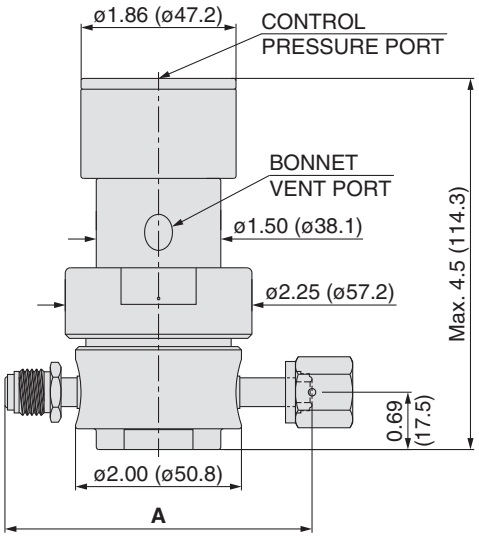

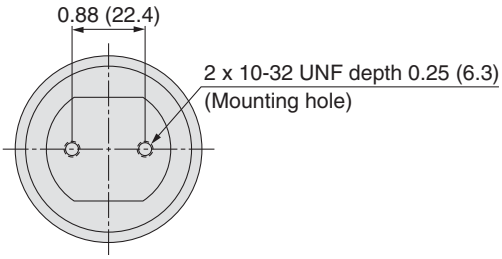

Connections	A	
	inch	(mm)
FV4	3.70	(94.0)
MV4		
TW4	2.96	(75.2)
FV6	4.70	(119.4)
MV6		
TW6	2.96	(75.2)

Flow Characteristics

AP10PA

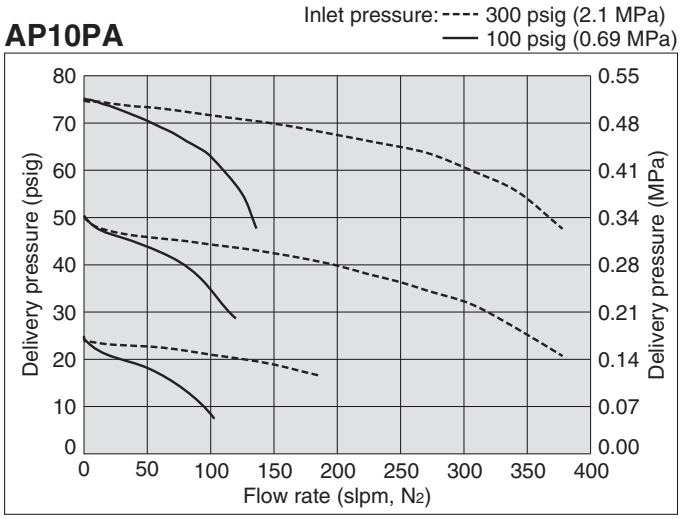

AP10PA

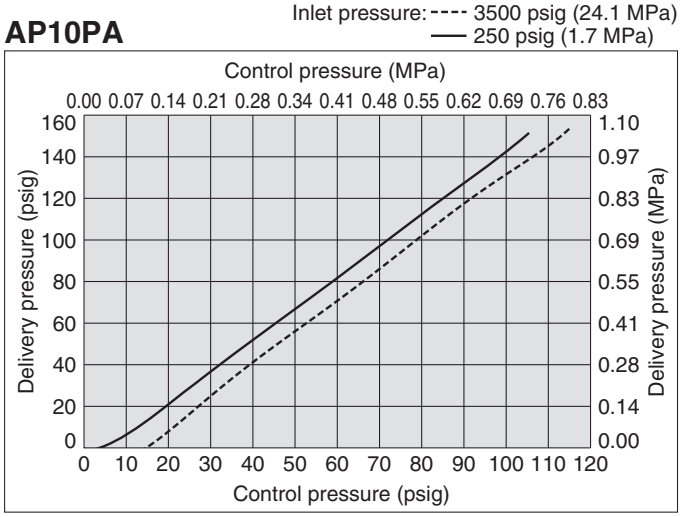

Hastelloy® is a registered trademark of Haynes International.
Vespel® is a registered trademark of DuPont.

Pneumatic Actuation Pressure Regulator

Low flow (Tied-diaphragm)

Series AP15PA

- **Actuation control pressure isolated from process gas by two seals**
- **Body material: 316L SS secondary remelt**
- **High inlet pressure type: Max. 3500 psig (24.1 MPa)**
- **Flow capacity Standard: to 30 slpm**
- **Hastelloy internals available for corrosion resistance**
- **100 psig (0.69 MPa) outlet pressure achievable with 800 psig (0.55 MPa) control pressure or less**

How to Order

AP15 PA S ☐ 2PW FV4 FV4 ☐ ☐ ☐ ☐

Port Number: ① ② ③ ④

Delivery pressure

Code	Delivery pressure
PA	7 to 150 psig (0.05 to 1.0MPa)

Material

Code	Body	Poppet	Diaphragm	Nozzle
S	316L SS secondary remelt	316L SS	316L SS	316L SS
SHP		Hastelloy® C-22	Hastelloy® C-22	
SH				Hastelloy® C-22
H	Hastelloy® C-22			

Surface finish

Code	Surface finish Ra max
No code	15 µin. (0.4 µm) Standard
M	10 µin. (0.25 µm)
V	7 µin. (0.18 µm)
X	5 µin. (0.13 µm)

Ports

Code	Ports
2PW	2 ports
3PW	3 ports
4PW	4 ports

Connections (Inlet①, Outlet②)

Code	Connections
FV4	1/4 inch face seal (Female)
MV4	1/4 inch face seal (Male)
TW4	1/4 inch tube weld
FV6	3/8 inch face seal (Female)
MV6	3/8 inch face seal (Male)
TW6	3/8 inch tube weld

Gauge port (Inlet③, Outlet④)

Code	Pressure gauge *1)	
	psig/bar unit	MPa unit
No code	No gauge port	
0	No pressure gauge (Connections: 1/4 inch face seal male)	
V3	-30 in.Hg to 30 psig	-0.1 to 0.2 MPa
L	-30 in.Hg to 60 psig	-0.1 to 0.4 MPa
1	-30 in.Hg to 100 psig	-0.1 to 0.7 MPa
2	0 to 200 psig	0 to 1.4 MPa
4	0 to 400 psig	0 to 3 MPa
10	0 to 1000 psig	0 to 7 MPa
40	0 to 4000 psig	0 to 28 MPa

*1) Refer to gauge guide (P.94) for gauge specifications.

Seat material

Code	Material
No code	PCTFE (Standard)
VS	Vespel® *3)

*3) Not available with SHP, SH, H materials.

Pressure gauge unit *2)

Code	Unit
No code	psig/bar
MPA	MPa

*2) Pressure gauge unit MPa or psig/bar selectable. However under Japanese regulation, only MPa is available in Japan.

Porting Configuration (Top view)

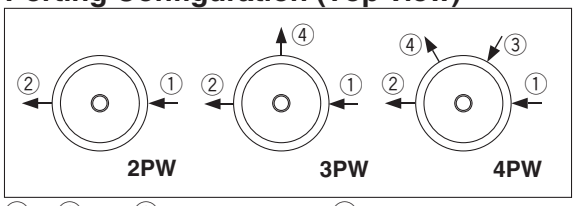

①IN ②OUT ③Gauge port (Inlet) ④Gauge port (Outlet)

Specifications

Operating Parameters		AP15PA
Delivery pressure		7 to 150 psig (0.05 to 1.0 MPa)
Gas		Select compatible materials of construction for the gas
Source pressure		Vacuum to 3500 psig (24.1 MPa)
Proof pressure (Inlet)		5000 psig (34.5 MPa)
Burst pressure		10000 psig (69 MPa)
Maximum control pressure		150 psig (1.0 MPa)
Ambient and operating temperature		-40 to 71 °C (No freezing) *1)
Cv		0.09
Leak rate	Inboard leakage	2×10^{-11} Pa·m³/sec
	Outboard leakage	2×10^{-10} Pa·m³/sec *2)
Across the seat leak		4×10^{-9} Pa·m³/sec *3)
Surface finish		Ra max 15 µin. (0.4 µm) Option: 10 µin. (0.25 µm), 7 µin. (0.18 µm), 5 µin. (0.13 µm)
Connections		Face seal, Tube weld
Control pressure port		NPT 1/8 inch
Bonnet port		NPT 1/8 inch
Supply pressure effect		0.41 psig (0.0028 MPa) rise in delivery pressure per 100 psig (0.7 MPa) source pressure drop
Installation		Bottom mount
Internal volume		0.51 in³ (8.4 cm³)

*1) -10 to 90 °C for Vespel® seat.
*2) Tested with Helium gas inlet pressure 1500 psig (10.5 MPa).
*3) Tested with Helium gas inlet pressure 1000 psig (7 MPa).

Wetted Parts Material

Wetted Parts	S	SHP	SH	H
Body	316L SS secondary remelt			Hastelloy® C-22
Surface finish	Electropolish + Passivation			Electropolish
Poppet	316L SS	Hastelloy® C-22		
Diaphragm	316L SS	Hastelloy® C-22		
Nozzle	316L SS		Hastelloy® C-22	
Seat	PCTFE (Option: Vespel®)	PCTFE		

Dimensions

inch (mm)

AP15PA

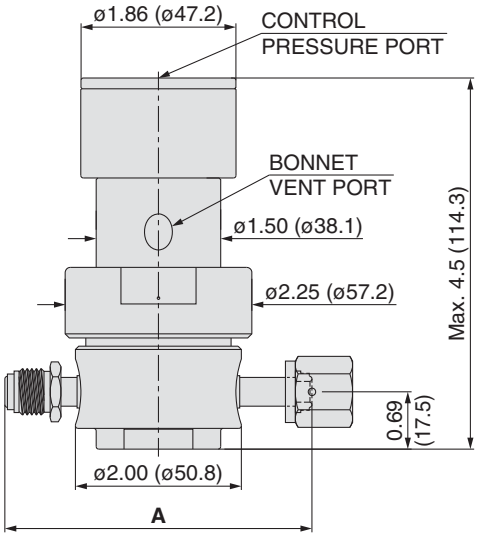

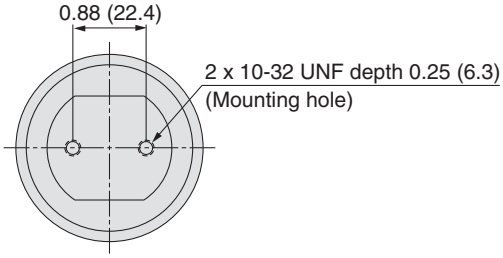

Connections	A	
	inch	(mm)
FV4	3.70	(94.0)
MV4		
TW4	2.96	(75.2)
FV6	4.70	(119.4)
MV6		
TW6	2.96	(75.2)

Flow Characteristics

AP15PA

Inlet pressure: ---- 300 psig (2.1 MPa)
—— 100 psig (0.69 MPa)

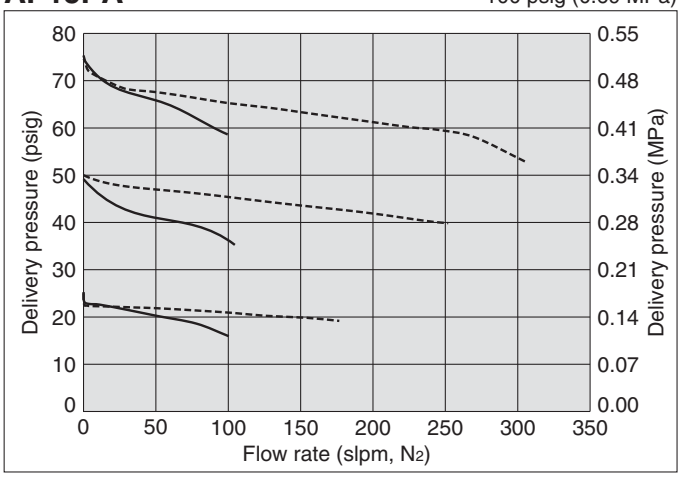

AP15PA

Inlet pressure: ---- 3500 psig (24.1 MPa)
—— 250 psig (1.7 MPa)

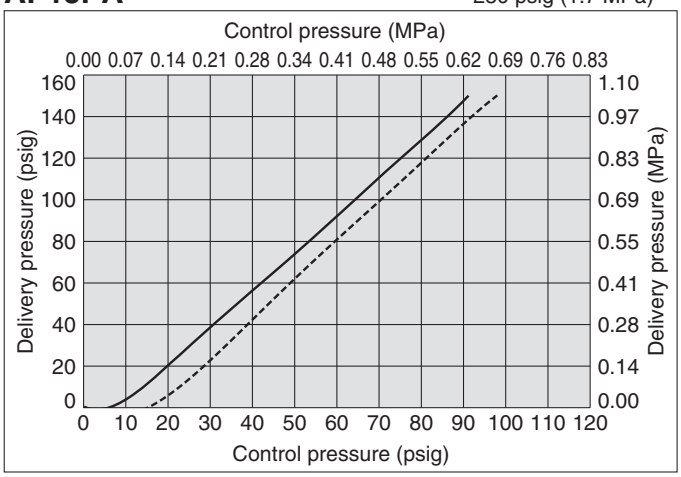

Hastelloy® is a registered trademark of Haynes International.
Vespel® is a registered trademark of DuPont.

Pneumatic Actuation Pressure Regulator

Intermediate flow (Tied-diaphragm)

Series AP14PAT

- **Actuation control pressure isolated from process gas by two seals**
- **Body material: 316L SS secondary remelt**
- **High inlet pressure type Standard: Max. 2300psig(15.9 MPa)**
  HR(option): Max. 3000psig (20.7MPa)
- **Flow capacity: to 400 slpm**
- **Hastelloy internals standard**
- **100 psig (0.69 MPa) outlet pressure achievable with 80 psig (0.55 MPa) control pressure or less**

How to Order

AP14 PA T S [ ] 2PW FV4 FV4 [ ] [ ] [ ] [ ] [ ]

Port Number: ① ② ③ ④

Delivery pressure

Code	Delivery pressure
PA	7 to 150 psig (0.05 to 1.0 MPa)

Material

Code	Body	Poppet	Diaphragm	Nozzle
S	316L SS secondary remelt	Hastelloy® C-22	Hastelloy® C-22	316L SS
SH				Hastelloy® C-22

Surface finish

Code	Surface finish Ra max
No code	15 µin. (0.4 µm) Standard
M	10 µin. (0.25 µm)
V	7 µin. (0.18 µm)
X	5 µin. (0.13 µm)

Ports

Code	Ports
2PW	2 ports
3PW	3 ports
4PW	4 ports

Connections (Inlet①, Outlet②)

Code	Connections
FV4	1/4 inch face seal (Female)
MV4	1/4 inch face seal (Male)
TW4	1/4 inch tube weld
FV6	3/8 inch face seal (Female)
MV6	3/8 inch face seal (Male)
TW6	3/8 inch tube weld
FV8	1/2 inch face seal (Female)
MV8	1/2 inch face seal (Male)
TW8	1/2 inch tube weld

Gauge port (Inlet③, Outlet④)

Code	Pressure gauge *1)	
	psig/bar unit	MPa unit
No code	No gauge port	
0	No pressure gauge (Connections: 1/4 inch face seal male)	
V3	-30 in.Hg to 30 psig	-0.1 to 0.2 MPa
L	-30 in.Hg to 60 psig	-0.1 to 0.4 MPa
1	-30 in.Hg to 100 psig	-0.1 to 0.7 MPa
2	0 to 200 psig	0 to 1.4 MPa
4	0 to 400 psig	0 to 3 MPa
10	0 to 1000 psig	0 to 7 MPa
40	0 to 4000 psig	0 to 28 MPa

*1) Refer to gauge guide (P.94) for gauge specifications.

Option

Code	Specification
No code	Standard
HR	High inlet pressure *4) (Max. inlet pressure 3000 psig (20.7 MPa))

*4) Full outlet pressure rating may not be achieved at all inlet pressure.

Seat material

Code	Material
No code	PCTFE (Standard)
VS	Vespel® *4)

*3) Not available with SH material.

Pressure gauge unit *2)

Code	Unit
No code	psig/bar
MPA	MPa

*2) Pressure gauge unit MPa or psig/bar selectable. However under Japanese regulation, only MPa is available in Japan.

Porting Configuration(Top View)

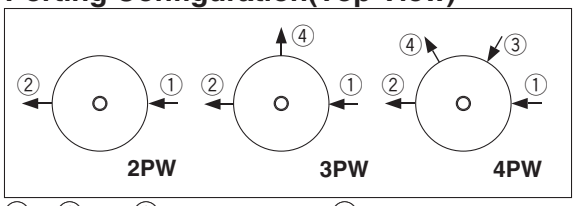

①IN ②OUT ③Gauge port (Inlet) ④Gauge port (Outlet)

Specifications

Operating Parameters		AP14PAT
Delivery pressure		7 to 150 psig (0.05 to 1.0 MPa)
Gas		Select compatible materials of construction for the gas
Source pressure		Vacuum to 2300 psig (15.9 MPa)
Proof pressure (Inlet)		4000 psig (27.6 MPa)
Burst pressure		8000 psig (55.2 MPa)
Maximum control pressure		150 psig (1.0 MPa)
Ambient and operating temperature		-40 to 71 °C (No freezing) *1)
Cv		0.45
Leak rate	Inboard leakage	2×10^{-11} Pa·m³/sec
	Outboard leakage	2×10^{-10} Pa·m³/sec *2)
Across the seat leak		4×10^{-9} Pa·m³/sec *3)
Surface finish		Ra max 15 µin. (0.4 µm) Option: 10 µin. (0.25 µm), 7 µin. (0.18 µm), 5 µin. (0.13 µm)
Connections		Face seal, Tube weld
Control pressure port		NPT 1/8 inch
Bonnet port		NPT 1/8 inch
Supply pressure effect		1.6 psig (0.011 MPa) rise in delivery pressure per 100 psig (0.7 MPa) source pressure drop
Installation		Bottom mount
Internal volume		1.06 in³ (17.4 cm³)

*1) -10 to 90 °C for Vespel® seat.
*2) Tested with Helium gas inlet pressure 1500 psig (10.5 MPa).
*3) Tested with Helium gas inlet pressure 1000 psig (7 MPa).

Option

High inlet pressure

Changes from the standard type are:

Option	Other Parameters	AP14PAT
HR	**Delivery pressure**	7 to 150 psig (0.05 to 1.0 MPa) *)
	Source pressure	Vacuum to 3000 psig (20.7 MPa)
	Proof pressure (Inlet)	4500 psig (31 MPa)
	Burst pressure	9000 psig (62 MPa)

*) HR option will not achieve rated outlet pressure at all inlet pressures.

Wetted Parts Material

Wetted Parts	S	SH
Body	316L SS secondary remelt	
Surface finish	Electropolish + Passivation	
Poppet	Hastelloy® C-22	
Diaphragm	Hastelloy® C-22	
Nozzle	316L SS	Hastelloy® C-22
Seat	PCTFE (Option: Vespel®)	PCTFE

Dimensions

inch (mm)

AP14PAT

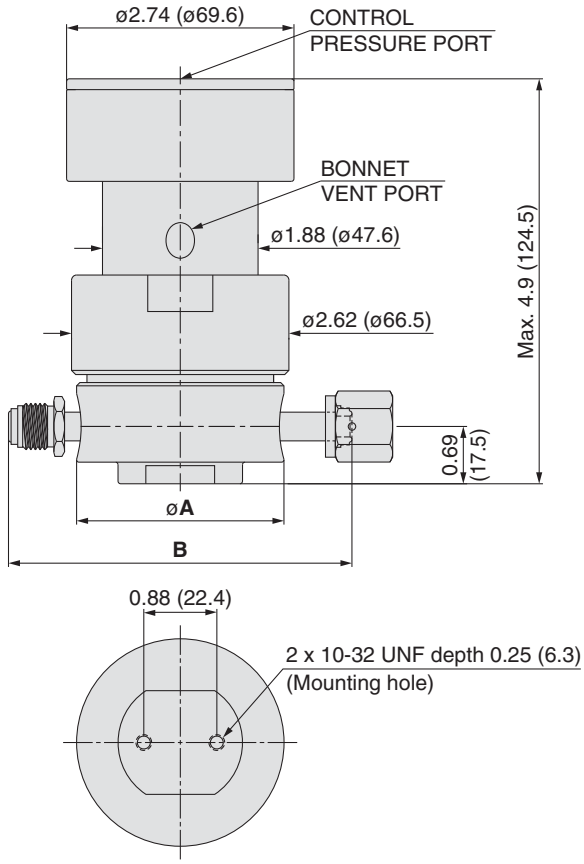

Connections	A		B	
	inch	(mm)	inch	(mm)
FV4	2.00	(50.8)	3.70	(94.0)
MV4			4.00	(101.6)
TW4			3.46	(87.9)
FV6	2.50	(63.5)	5.22	(132.6)
MV6				
TW6			4.00	(101.6)
FV8			5.22	(132.6)
MV8				
TW8			4.34	(110.2)

Flow Characteristics

AP14PAT

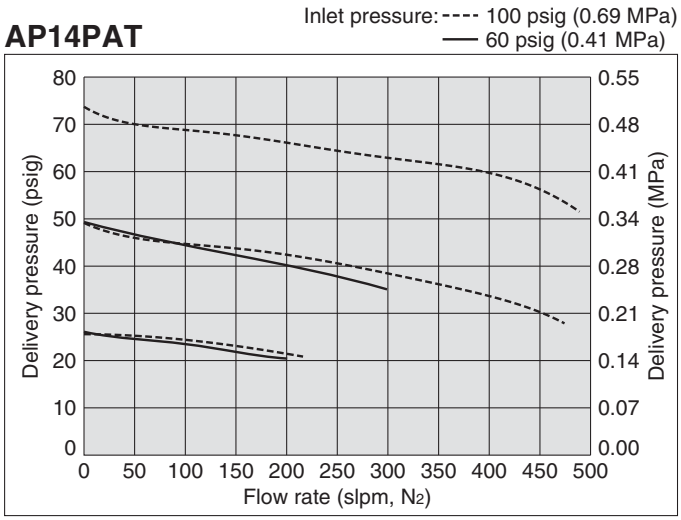

AP14PAT

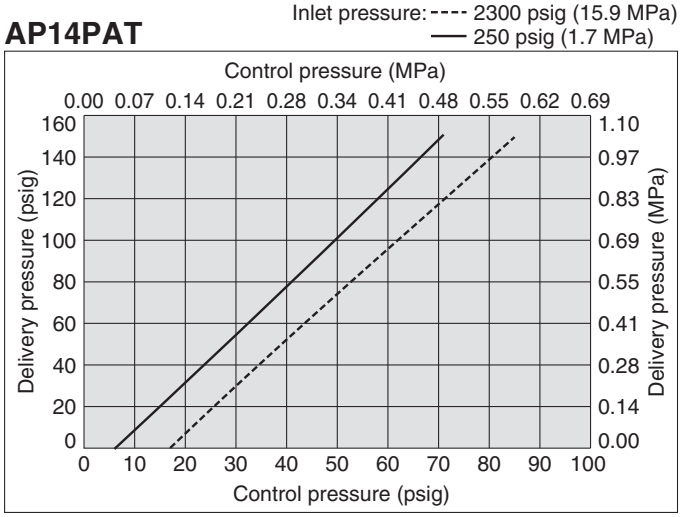

Hastelloy® is a registered trademark of Haynes International.
Vespel® is a registered trademark of DuPont.

Pneumatic Actuation Pressure Regulator

High flow (Tied-diaphragm)

Series AP12PA

- **Actuation control pressure isolated from process gas by two seals**
- **Body material: 316L SS secondary remelt**
- **High inlet pressure type Standard: Max. 1700psig(11.7 MPa)**
  HR(option): Max. 3000psig (20.7MPa)
- **Flow capacity Standard: to 800 slpm**
  HF (Option): to 1000 slpm
- **Hastelloy internals available for corrosion resistance**
- **100 psig (0.69 MPa) outlet pressure achievable with 80 psig (0.55 MPa) control pressure or less**

How to Order

AP12 PA S ☐ 2PW FV8 FV8 ☐ ☐ ☐ ☐ ☐

Port Number: ① ② ③ ④

Delivery pressure

Code	Delivery pressure
PA	7 to 150 psig (0.05 to 1.0 MPa)

Material

Code	Body	Poppet	Diaphragm	Nozzle
S	316L SS secondary remelt	316L SS	Hastelloy® C-22	316L SS
SHP		Hastelloy® C-22		Hastelloy® C-22
SH				

Surface finish

Code	Surface finish Ra max
No code	15 µin. (0.4 µm) Standard
M	10 µin. (0.25 µm)
V	7 µin. (0.18 µm)
X	5 µin. (0.13 µm)

Ports

Code	Ports
2PW	2 ports
3PW	3 ports
4PW	4 ports

Connections (Inlet①, Outlet②)

Code	Connections
FV4	1/4 inch face seal (Female)
MV4	1/4 inch face seal (Male)
TW4	1/4 inch tube weld
FV6	3/8 inch face seal (Female)
MV6	3/8 inch face seal (Male)
TW6	3/8 inch tube weld
FV8	1/2 inch face seal (Female)
MV8	1/2 inch face seal (Male)
TW8	1/2 inch tube weld
FV12	3/4 inch face seal (Female)
MV12	3/4 inch face seal (Male)
TW12	3/4 inch tube weld

Gauge port (Inlet③, Outlet④)

Code	Pressure gauge *1)	
	psig/bar unit	MPa unit
No code	No gauge port	
0	No pressure gauge (Connections: 1/4 inch face seal male)	
V3	-30 in.Hg to 30 psig	-0.1 to 0.2 MPa
L	-30 in.Hg to 60 psig	-0.1 to 0.4 MPa
1	-30 in.Hg to 100 psig	-0.1 to 0.7 MPa
H	-30 in.Hg to 160 psig	-0.1 to 1.1 MPa
2	0 to 200 psig	0 to 1.4 MPa
4	0 to 400 psig	0 to 3 MPa
10	0 to 1000 psig	0 to 7 MPa
40	0 to 4000 psig	0 to 28 MPa

*1) Refer to gauge guide (P.94) for gauge specifications.

Option

Code	Specification
No code	Standard (Cv: 0.65)
HF	High flow (Cv: 1.1) *4)
HR	High inlet pressure *4) *5) (Max. inlet pressure 3000 psig (20.7 MPa))

*4) Full outlet pressure rating may not be achieved at all inlet pressure.
*5) 3/4 inch face seal fittings rated to 2400psig (16.5MPa) maximum.

Seat material

Code	Material
No code	PCTFE (Standard)
VS	Vespel® *3)

*3) Not available with SHP and SH materials.

Pressure gauge unit *2)

Code	Unit
No code	psig/bar
MPA	MPa

*2) Pressure gauge unit MPa or psig/bar selectable. However under Japanese regulation, only MPa is available in Japan.

Porting Configuration (Top View)

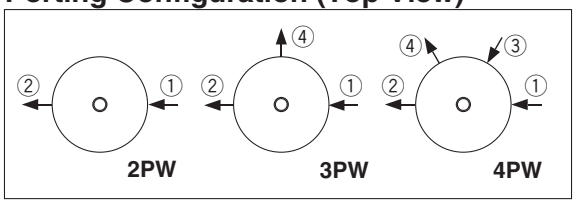

①IN ②OUT ③Gauge port (Inlet) ④Gauge port (Outlet)

Specifications

Operating Parameters		AP12PA
Delivery pressure		7 to 150 psig (0.05 to 1.0 MPa)
Gas		Select compatible materials of construction for the gas
Source pressure		Vacuum to 1700 psig (11.7 MPa)
Proof pressure (Inlet)		2550 psig (17.6 MPa)
Burst pressure		8000 psig (55.2 MPa)
Maximum control pressure		150 psig (1.0 MPa)
Ambient and operating temperature		-40 to 71 °C (No freezing) *1)
Cv		0.65
Leak rate	Inboard leakage	2×10^{-11} Pa·m³/sec
	Outboard leakage	2×10^{-10} Pa·m³/sec *2)
Across the seat leak		4×10^{-9} Pa·m³/sec *3)
Surface finish		Ra max 15 µin. (0.4 µm) Option: 10 µin. (0.25 µm), 7 µin. (0.18 µm), 5 µin. (0.13 µm)
Connections		Face seal, Tube weld
Control pressure port		NPT 1/8 inch
Bonnet port		NPT 1/8 inch
Supply pressure effect		3.5 psig (0.024 MPa) rise in delivery pressure per 100 psig (0.7 MPa) source pressure drop
Installation		Bottom mount
Internal volume		1.20 in³ (19.6 cm³)

*1) -10 to 90 °C for Vespel® seat.
*2) Tested with Helium gas inlet pressure 1500 psig (10.5 MPa).
*3) Tested with Helium gas inlet pressure 1000 psig (7 MPa).

Options

1. High flow

Higher flow capacity with internal changes only, no change in external dimensions. Changes from the standard type are:

Option	Other Parameters	AP12PA
HF	**Delivery pressure**	7 to 150 psig (0.05 to 1.0 MPa) *1)
	Cv	1.1
	Supply pressure effect	4.2 psig (0.029 MPa) rise in delivery pressure per 100 psig (0.7 MPa) source pressure drop

2. High inlet pressure

Changes from the standard type are:

Option	Other Parameters	AP12PA
HR	**Delivery pressure**	7 to 150 psig (0.05 to 1.0 MPa) *1)
	Source pressure	Vacuum to 3000 psig (20.7 MPa) *2)
	Proof pressure (Inlet)	4500 psig (31 MPa)
	Burst pressure	9000 psig (62 MPa)

*1) HF and HR option will not achieve rated outlet pressure at all inlet pressures.
*2) 3/4 inch face seal fittings rated to 2400psig (16.5MPa) maximum.

Wetted Parts Material

Wetted Parts	S	SHP	SH
Body	316L SS secondary remelt		
Surface finish	Electropolish + Passivation		
Poppet	316L SS	Hastelloy® C-22	
Diaphragm	Hastelloy® C-22		
Nozzle	316L SS		Hastelloy® C-22
Seat	PCTFE (Option: Vespel®)	PCTFE	

Dimensions

inch (mm)

AP12PA

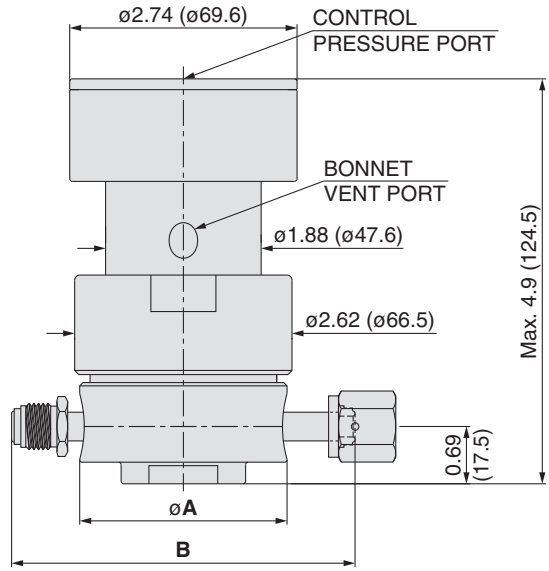

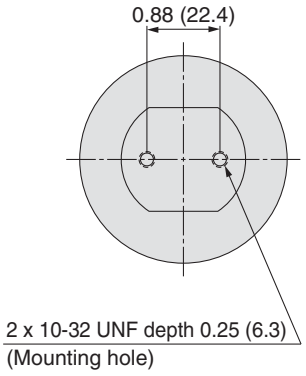

Connections	A inch	A (mm)	B inch	B (mm)
FV4	2.00	(50.8)	3.70	(94.0)
MV4			4.00	(101.6)
TW4			3.46	(87.9)
FV6	2.50	(63.5)	5.22	(132.6)
MV6				
TW6			4.00	(101.6)
FV8			5.22	(132.6)
MV8				
TW8			4.34	(110.2)
FV12			6.26	(159.0)
MV12				
TW12			5.00	(127.0)

Flow Characteristics

AP12PA

Inlet pressure: ---- 100 psig (0.69 MPa)
—— 60 psig (0.41 MPa)

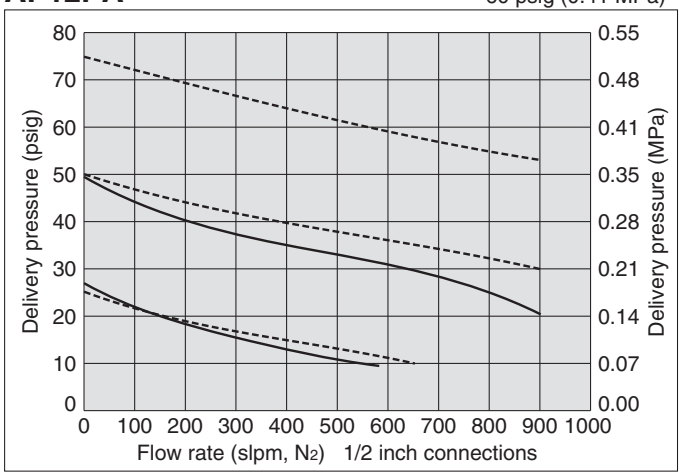

AP12PA

Inlet pressure: ---- 1700 psig (11.7 MPa)
—— 250 psig (1.7 MPa)

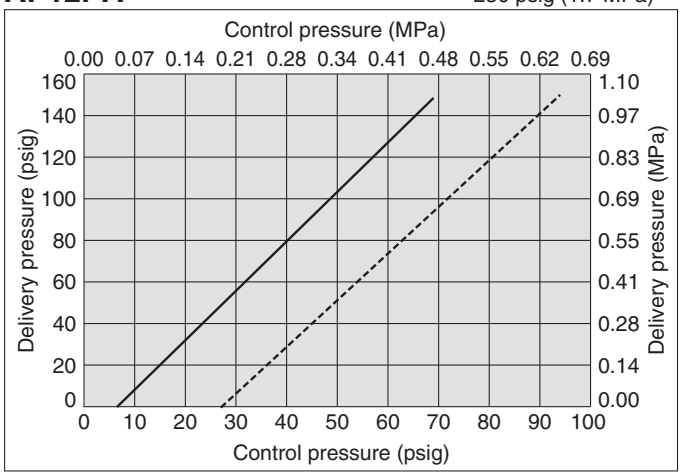

Hastelloy® is a registered trademark of Haynes International.
Vespel® is a registered trademark of DuPont.

Pneumatic Actuation Pressure Regulator | Low flow

Series AZ10PA

- **Actuation control pressure isolated from process gas by two seals**
- **Body material: 316L SS**
- **High inlet pressure type: Max. 3500 psig (24.1 MPa)**
- **Flow capacity Standard: to 30 slpm**
  HF(Option): to 120 slpm
- **Hastelloy internals available for corrosion resistance**
- **100 psig (0.69 MPa) outlet pressure achievable with 80 psig (0.55 MPa) control pressure or less**

How to Order

AZ10 PA S [ ] 2PW FV4 FV4 [ ] [ ] [ ] [ ] [ ]

Port Number: ① ② ③ ④

Delivery pressure

Code	Delivery pressure
PA	7 to 150 psig (0.05 to 1.0 MPa)

Material

Code	Body	Poppet	Diaphragm	Nozzle
S	316L SS	316L SS	316L SS	316L SS
SHP		Hastelloy® C-22	Hastelloy® C-22	

Surface finish

Code	Surface finish Ra
No code	10 µin. (0.25 µm) Standard
Q	25 µin. (0.62 µm)

Ports

Code	Ports
2PW	2 ports
3PW	3 ports
4PW	4 ports

Connections (Inlet①, Outlet②)

Code	Connections
FV4	1/4 inch face seal (Female)
MV4	1/4 inch face seal (Male)
FV6	3/8 inch face seal (Female)
MV6	3/8 inch face seal (Male)
TW6	3/8 inch tube weld

Gauge port (Inlet③, Outlet④)

Code	Pressure gauge *1)	
	psig/bar unit	MPa unit
No code	No gauge port	
0	No pressure gauge (Connections: 1/4 inch face seal male)	
V3	-30 in.Hg to 30 psig	-0.1 to 0.2 MPa
L	-30 in.Hg to 60 psig	-0.1 to 0.4 MPa
1	-30 in.Hg to 100 psig	-0.1 to 0.7 MPa
H	-30 in.Hg to 160 psig	-0.1 to 1.1 MPa

*1) Refer to gauge guide (P.94) for gauge specifications.

Option

Code	Specification
No code	Standard (Cv: 0.09)
HF	High flow (Cv: 0.15) *6)

*6) Full outlet pressure rating may not be achieved at all inlet pressure.

Seat material

Code	Material
No code	PCTFE (Standard)
VS	Vespel® *3)
TF	PTFE *4)*5)

*3) Not available with SHP material.
*4) PTFE recommended for applications such as within a process tool.
*5) Source pressure rating is limited to 300psig (2.1MPa) or less.

Pressure gauge unit *2)

Code	Unit
No code	psig/bar
MPA	MPa

*2) Pressure gauge unit MPa or psig/bar selectable. However under Japanese regulation, only MPa is available in Japan.

Porting Configuration (Top View)

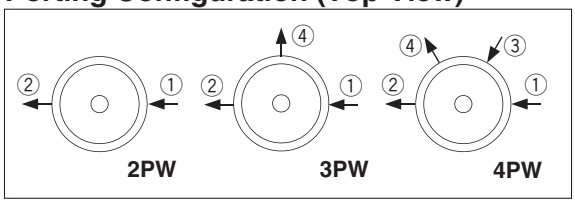

①IN ②OUT ③Gauge port (Inlet) ④Gauge port (Outlet)

Specifications

Operating Parameters		AZ10PA
Delivery pressure		7 to 150 psig (0.05 to 1.0 MPa)
Gas		Select compatible materials of construction for the gas
Source pressure		Vacuum to 3500 psig (24.1 MPa) *1)
Proof pressure (Inlet)		5000 psig (34.5 MPa)
Burst pressure		10000 psig (69 MPa)
Maximum control pressure		150 psig (1.0 MPa)
Ambient and operating temperature		-40 to 71 °C (No freezing) *2)
Cv		0.09
Leak rate	Inboard leakage	$2x10^{-11}$ Pa·m³/sec
	Outboard leakage	$2x10^{-10}$ Pa·m³/sec *3)
Across the seat leak		$4x10^{-9}$ Pa·m³/sec *4)
Surface finish		Ra 10 µin. (0.25 µm) Option: 25 µin. (0.62 µm)
Connections		Face seal, Tube weld
Control pressure port		NPT 1/8 inch
Bonnet port		NPT 1/8 inch
Supply pressure effect		0.38 pisg (0.0026 MPa) rise in delivery pressure per 100 psig (0.7 MPa) source pressure drop
Installation		Bottom mount
Internal volume		0.49 in³ (8 cm³)

*1) Max. 300 psig (2.1 MPa) for PTFE seat.
*2) -10 to 90 °C for Vespel® seat.
*3) Tested with Helium gas inlet pressure 1500 psig (10.5 MPa).
*4) Tested with Helium gas inlet pressure 1000 psig (7 MPa).

Option

High flow

Higher flow capacity with internal changes only, no change in external dimensions. Changes from the standard type are:

Option	Other Parameters	AZ10PA
HF	**Delivery pressure**	7 to 150 psig (0.05 to 1.0 MPa) *)
	Cv	0.15
	Supply pressure effect	0.75 psig (0.0052 MPa) rise in delivery pressure per 100 psig (0.7 MPa) source pressure drop

*) HF option will not achieve rated outlet pressure at all inlet pressures.

Wetted Parts Material

Wetted Parts	S	SHP
Body	316L SS	
Surface finish	Electropolish + Passivation	
Poppet	316L SS	Hastelloy® C-22
Diaphragm	316L SS	Hastelloy® C-22
Nozzle	316L SS	
Seat	PCTFE (Option: Vespel®, PTFE)	PCTFE (Option: PTFE)

Dimensions

inch (mm)

AZ10PA

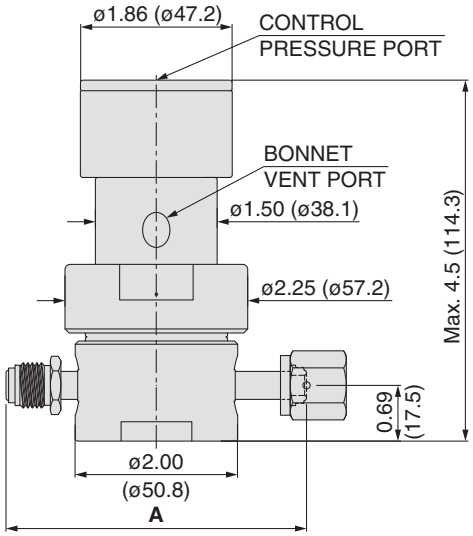

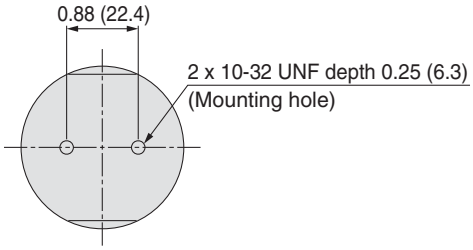

Connections	A	
	inch	(mm)
FV4	3.70	(94.0)
MV4		
FV6	4.70	(119.4)
MV6		
TW6	2.96	(75.2)

Flow Characteristics

AZ10PA

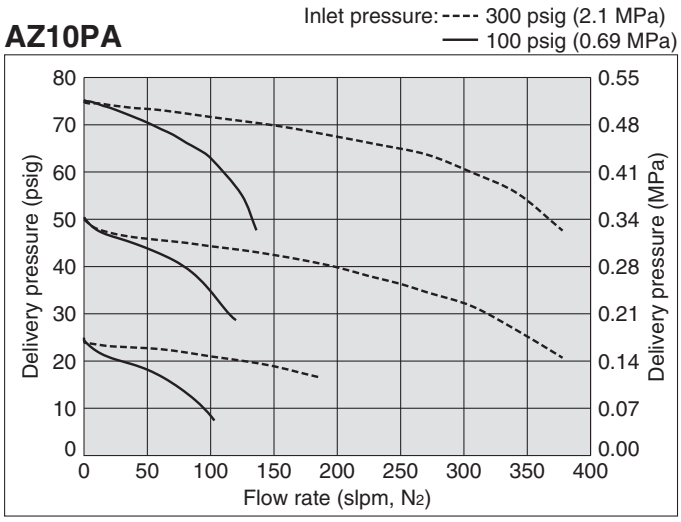

AZ10PA

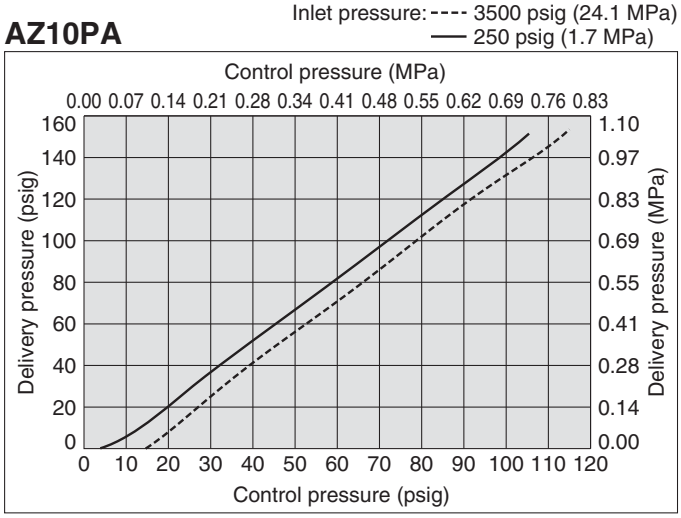

Hastelloy® is a registered trademark of Haynes International.
Vespel® is a registered trademark of DuPont.

Pneumatic Actuation Pressure Regulator | Low flow (Tied-diaphragm)

Series AZ15PA

- **Actuation control pressure isolated from process gas by two seals**
- **Body material: 316L SS secondary remelt**
- **High inlet pressure type: Max. 3500 psig (24.1 MPa)**
- **Flow capacity Standard: to 30 slpm**
- **Hastelloy internals available for corrosion resistance**
- **100 psig (0.69 MPa) outlet pressure achievable with 80 psig (0.55 MPa) control pressure or less**

How to Order

AZ15 PA S [ ] 2PW FV4 FV4 [ ] [ ] [ ] [ ]

Port Number: ① FV4, ② FV4, ③ [ ], ④ [ ]

Delivery pressure

Code	Delivery pressure
PA	7 to 150 psig (0.05 to 1.0 MPa)

Material

Code	Body	Poppet	Diaphragm	Nozzle
S	316L SS	316L SS	316L SS	316L SS
SHP		Hastelloy® C-22	Hastelloy® C-22	

Surface finish

Code	Surface finish Ra
No code	10 µin. (0.25 µm) Standard
Q	25 µin. (0.62 µm)

Ports

Code	Ports
2PW	2 ports
3PW	3 ports
4PW	4 ports

Connections (Inlet①, Outlet②)

Code	Connections
FV4	1/4 inch face seal (Female)
MV4	1/4 inch face seal (Male)
FV6	3/8 inch face seal (Female)
MV6	3/8 inch face seal (Male)
TW6	3/8 inch tube weld

Gauge port (Inlet③, Outlet④)

Code	Pressure gauge ∗1)	
	psig/bar unit	MPa unit
No code	No gauge port	
0	No pressure gauge (Connections: 1/4 inch face seal male)	
V3	-30 in.Hg to 30 psig	-0.1 to 0.2 MPa
L	-30 in.Hg to 60 psig	-0.1 to 0.4 MPa
1	-30 in.Hg to 100 psig	-0.1 to 0.7 MPa
H	-30 in.Hg to 160 psig	-0.1 to 1.1 MPa

∗1) Other range available. Refer to gauge guide (P.94).

Seat material

Code	Material
No code	PCTFE (Standard)
VS	Vespel® ∗3)

∗3) Not available with SHP material.

Pressure gauge unit ∗2)

Code	Unit
No code	psig/bar
MPA	MPa

∗2) Pressure gauge unit MPa or psig/bar selectable. However under Japanese regulation, only MPa is available in Japan.

Porting Configuration (Top View)

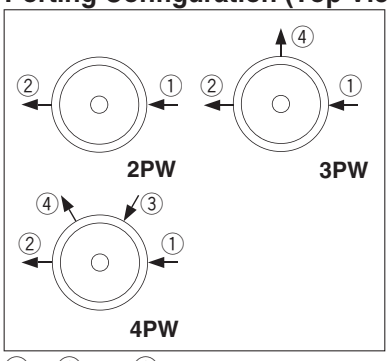

①IN ②OUT ③Gauge port (Inlet)
④Gauge port (Outlet)

Specifications

Operating Parameters		AZ15PA
Delivery pressure		7 to 150 psig (0.05 to 1.0 MPa)
Gas		Select compatible materials of construction for the gas
Source pressure		Vacuum to 3500 psig (24.1 MPa)
Proof pressure (Inlet)		5000 psig (34.5 MPa)
Burst pressure		10000 psig (69 MPa)
Maximum control pressure		150 psig (1.0 MPa)
Ambient and operating temperature		-40 to 71 °C (No freezing) ∗1)
Cv		0.09
Leak rate	Inboard leakage	$2x10^{-11}$ Pa·m³/sec
	Outboard leakage	$2x10^{-10}$ Pa·m³/sec ∗2)
Across the seat leak		$4x10^{-9}$ Pa·m³/sec ∗3)
Surface finish		Ra 10 µin. (0.25 µm) Option: 25 µin. (0.62 µm)
Connections		Face seal, Tube weld
Control pressure port		NPT 1/8 inch
Bonnet port		NPT 1/8 inch
Supply pressure effect		0.41 psig (0.0028 MPa) rise in delivery pressure per 100 psig (0.7 MPa) source pressure drop
Installation		Bottom mount
Internal volume		0.51 in³ (8.4 cm³)

∗1) -10 to 90 °C for Vespel® seat.
∗2) Tested with Helium gas inlet pressure 1500 psig (10.5 MPa).
∗3) Tested with Helium gas inlet pressure 1000 psig (7 MPa).

Wetted Parts Material

Wetted Parts	S	SHP
Body	316L SS	
Surface finish	Electropolish + Passivation	
Poppet	316L SS	Hastelloy® C-22
Diaphragm	316L SS	Hastelloy® C-22
Nozzle	316L SS	
Seat	PCTFE (Option: Vespel®)	PCTFE

Dimensions

inch (mm)

AZ15PA

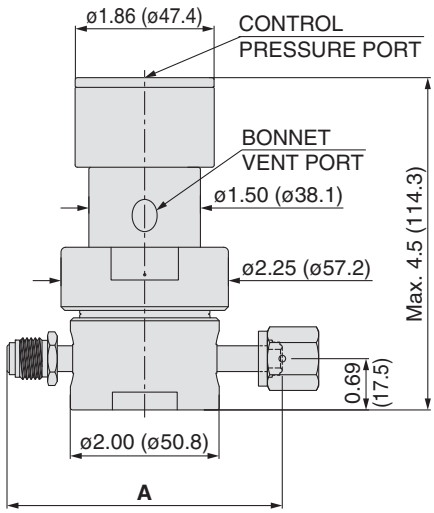

Connections	A	
	inch	(mm)
FV4	3.70	(94.0)
MV4		
FV6	4.70	(119.4)
MV6		
TW6	2.96	(75.2)

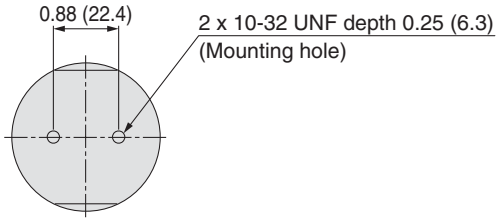

Flow Characteristics

AZ15PA

Inlet pressure: ---- 300 psig (2.1 MPa)
—— 100 psig (0.69 MPa)

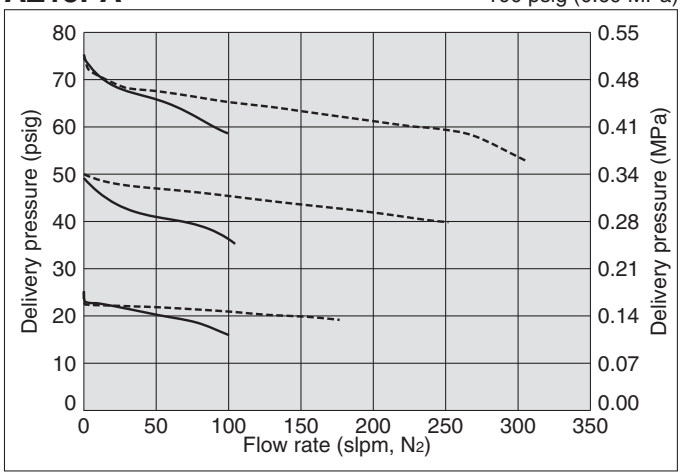

AZ15PA

Inlet pressure: – – – 3500 psig (24.1 MPa)
—— 250 psig (1.7 MPa)

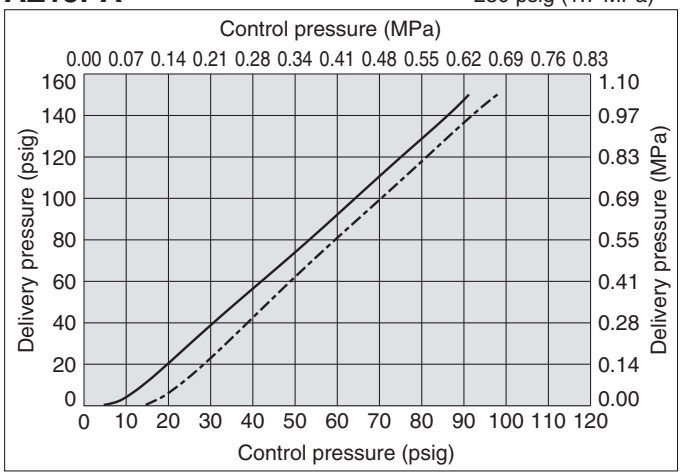

Hastelloy® is a registered trademark of Haynes International.
Vespel® is a registered trademark of DuPont.

Pneumatic Actuation Pressure Regulator

Intermediate flow (Tied-diaphragm)

Series AZ14PAT

- **Actuation control pressure isolated from process gas by two seals**
- **Body material: 316 SS secondary remelt**
- **High inlet pressure type Standard: Max. 2300psig(15.9 MPa)**
  HR(option): Max. 3000psig (20.7MPa)
- **Flow capacity : to 400 slpm**
- **Hastelloy internals standard**
- **100 psig (0.69 MPa) outlet pressure achievable with 80 psig (0.55 MPa) control pressure or less**

How to Order

AZ14 PA T S □ 2PW FV4 FV4 □ □ □ □ □

Port Number: ① ② ③ ④

Delivery pressure

Code	Delivery pressure
PA	7 to 150 psig (0.05 to 1.0 MPa)

Material

Code	Body	Poppet	Diaphragm
S	316L SS	Hastelloy® C-22	Hastelloy® C-22

Surface finish

Code	Surface finish Ra
No code	10 µin. (0.25 µm) Standard
Q	25 µin. (0.62 µm)

Ports

Code	Ports
2PW	2 ports
3PW	3 ports
4PW	4 ports

Connections (Inlet①, Outlet②)

Code	Connections
FV4	1/4 inch face seal (Female)
MV4	1/4 inch face seal (Male)
FV6	3/8 inch face seal (Female)
MV6	3/8 inch face seal (Male)
TW6	3/8 inch tube weld
FV8	1/2 inch face seal (Female)
MV8	1/2 inch face seal (Male)
TW8	1/2 inch tube weld

Gauge port (Inlet③, Outlet④)

Code	Pressure gauge *1)	
	psig/bar unit	MPa unit
No code	No gauge port	
0	No pressure gauge (Connections: 1/4 inch face seal male)	
V3	-30 in.Hg to 30 psig	-0.1 to 0.2 MPa
L	-30 in.Hg to 60 psig	-0.1 to 0.4 MPa
1	-30 in.Hg to 100 psig	-0.1 to 0.7 MPa
2	0 to 200 psig	0 to 1.4 MPa
4	0 to 400 psig	0 to 3 MPa
10	0 to 1000 psig	0 to 7 MPa
40	0 to 4000 psig	0 to 28 MPa

*1) Refer to gauge guide (P.94) for gauge specifications.

Option

Code	Specification
No code	Standard
HR	High inlet pressure *3) (Max. inlet pressure 3000 psig (20.7 MPa))

*3) Full outlet pressure rating may not be achieved at all inlet pressure.

Seat material

Code	Material
No code	PCTFE (Standard)
VS	Vespel®

Pressure gauge unit *2)

Code	Unit
No code	psig/bar
MPA	MPa

*2) Pressure gauge unit MPa or psig/bar selectable. However under Japanese regulation, only MPa is available in Japan.

Porting Configuration (Top View)

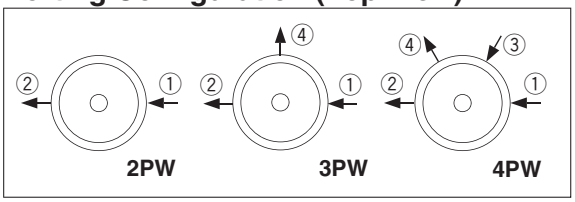

①IN ②OUT ③Gauge port (Inlet) ④Gauge port (Outlet)

Specifications

Operating Parameters		AZ14PAT
Delivery pressure		7 to 150 psig (0.05 to 1.0 MPa)
Gas		Select compatible materials of construction for the gas
Source pressure		Vacuum to 2300 psig (15.9 MPa)
Proof pressure (Inlet)		4000 psig (27.6 MPa)
Burst pressure		8000 psig (55.2 MPa)
Maximum control pressure		150 psig (1.0 MPa)
Ambient and operating temperature		-40 to 71 °C (No freezing) *1)
Cv		0.45
Leak rate	Inboard leakage	$2x10^{-11}$ Pa·m³/sec
	Outboard leakage	$2x10^{-10}$ Pa·m³/sec *2)
Across the seat leak		$4x10^{-9}$ Pa·m³/sec *3)
Surface finish		Ra 10 µin. (0.25 µm) Option: 25 µin. (0.62 µm)
Connections		Face seal, Tube weld
Control pressure port		NPT 1/8 inch
Bonnet port		NPT 1/8 inch
Supply pressure effect		1.6 psig (0.011 MPa) rise in delivery pressure per 100 psig (0.7 MPa) source pressure drop
Installation		Bottom mount
Internal volume		1.06 in³ (17.4 cm³)

*1) -10 to 90 °C for Vespel® seat.
*2) Tested with Helium gas inlet pressure 1500 psig (10.5 MPa).
*3) Tested with Helium gas inlet pressure 1000 psig (7 MPa).

Option

High inlet pressure

Changes from the standard type are:

Option	Other Parameters	AZ14PAT
HR	**Delivery pressure**	7 to 150 psig(0.05 to 1.0 MPa) *)
	Source pressure	Vacuum to 3000 psig (20.7 MPa)
	Proof pressure (Inlet)	4500 psig (31 MPa)
	Burst pressure	9000 psig (62 MPa)

*) HR option will not achieve rated outlet pressure at all inlet pressures.

Wetted Parts Material

Wetted Parts	S
Body	316L SS
Surface finish	Electropolish + Passivation
Poppet	Hastelloy® C-22
Diaphragm	Hastelloy® C-22
Nozzle	316L SS
Seat	PCTFE (Option: Vespel®)

Dimensions

inch (mm)

AZ14PAT

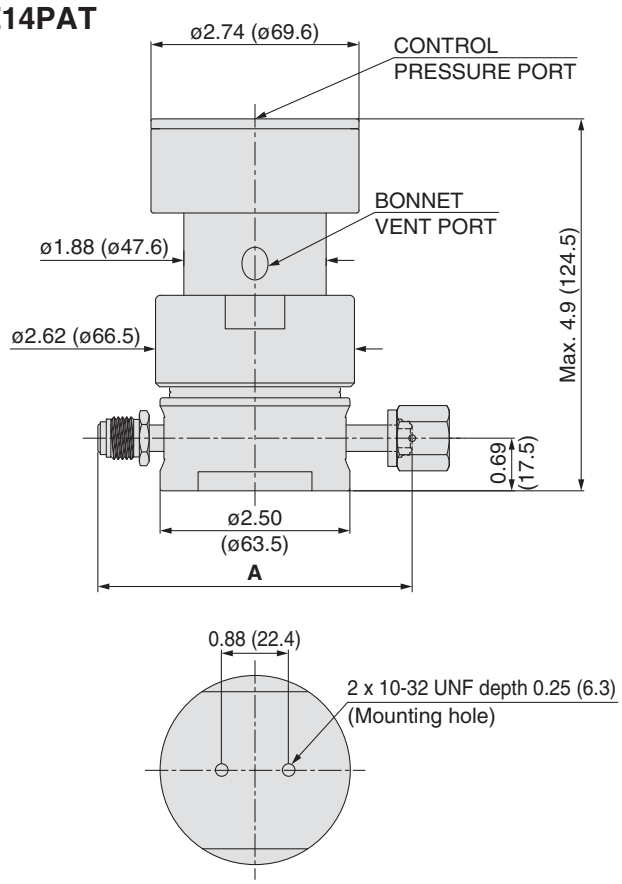

Connections	A	
	inch	(mm)
FV4	4.30	(109.2)
MV4		
FV6	5.22	(132.6)
MV6		
TW6	4.00	(101.6)
FV8	5.22	(132.6)
MV8		
TW8	4.34	(110.2)

Flow Characteristics

AZ14PAT

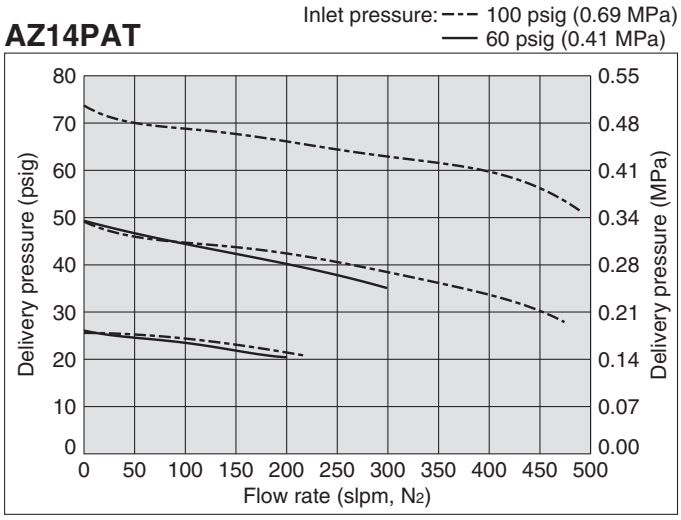

AZ14PAT

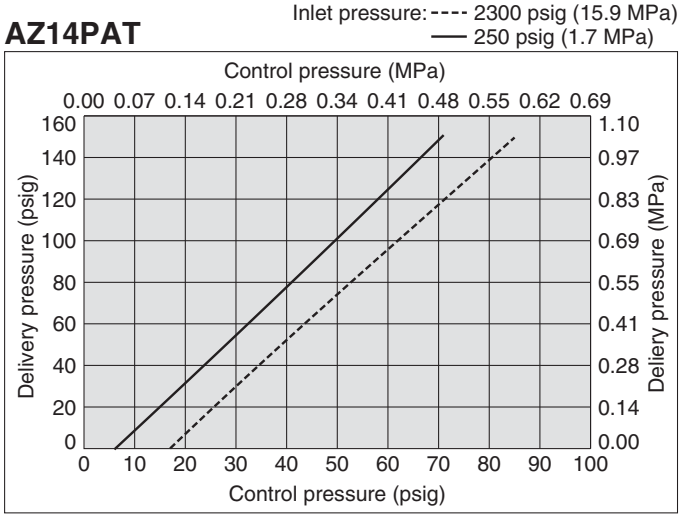

Hastelloy® is a registered trademark of Haynes International.
Vespel® is a registered trademark of DuPont.

Pneumatic Actuation Pressure Regulator

High flow (Tied-diaphragm)

Series AZ12PA

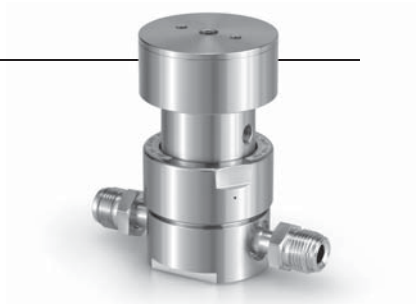

- **Actuation control pressure isolated from process gas by two seals**
- **Body material: 316L SS**
- **High inlet pressure type Standard: Max. 1700 psig (11.7 MPa)**
  HR (option): Max. 3000 psig (20.7 MPa)
- **Flow capacity Standard: to 800 slpm**
  HF(Option): to 1000 slpm
- **Hastelloy internals available for corrosion resistance**
- **100 psig (0.69 MPa) outlet pressure achievable with 80 psig (0.55 MPa) control pressure or less**

How to Order

Port Number ① ② ③ ④

AZ12 PA S □ 2PW FV8 FV8 □ □ □ □ □

Delivery pressure

Code	Delivery pressure
PA	7 to 150 psig (0.05 to 1.0 MPa)

Material

Code	Body	Poppet	Diaphragm
S	316L SS	316L SS	Hastelloy® C-22
SHP		Hastelloy® C-22	

Surface finish

Code	Surface finish Ra
No code	10 µin. (0.25 µm) Standard
Q	25 µin. (0.62 µm)

Ports

Code	Ports
2PW	2 ports
3PW	3 ports
4PW	4 ports

Connections (Inlet①, Outlet②)

Code	Connections
FV4	1/4 inch face seal (Female)
MV4	1/4 inch face seal (Male)
FV6	3/8 inch face seal (Female)
MV6	3/8 inch face seal (Male)
TW6	3/8 inch tube weld
FV8	1/2 inch face seal (Female)
MV8	1/2 inch face seal (Male)
TW8	1/2 inch tube weld

Option

Code	Specification
No code	Standard (Cv:0.65)
HF	High flow (Cv: 1.1) *4)
HR	High inlet pressure *4) (Max. inlet pressure 3000 psig (20.7 MPa))

*4) Full outlet pressure rating may not be achieved at all inlet pressure.

Seat material

Code	Material
No code	PCTFE (Standard)
VS	Vespel® *3)

*3) Not available with SHP material.

Porting Configuration (Top View)

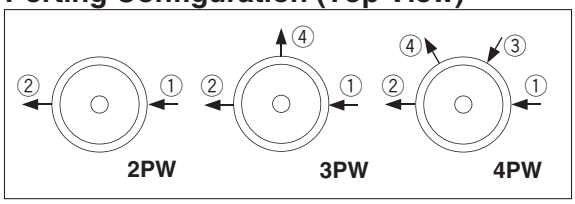

①IN ②OUT ③Gauge port (Inlet) ④Gauge port (Outlet)

Gauge port (Inlet③, Outlet④)

Code	Pressure gauge *1)	
	psig/bar unit	MPa unit
No code	No gauge port	
0	No pressure gauge (Connections: 1/4 inch face seal male)	
V3	-30 in.Hg to 30 psig	-0.1 to 0.2 MPa
L	-30 in.Hg to 60 psig	-0.1 to 0.4 MPa
1	-30 in.Hg to 100 psig	-0.1 to 0.7 MPa
H	-30 in.Hg to 160 psig	-0.1 to 1.1 MPa

*1) Refer to gauge guide (P.94) for gauge specifications.

Pressure gauge unit *2)

Code	Unit
No code	psig/bar
MPA	MPa

*2) Pressure gauge unit MPa or psig/bar selectable. However under Japanese regulation, only MPa is available in Japan.

Specifications

Operating Parameters		AZ12PA
Delivery pressure		7 to 150 psig (0.05 to 1.0 MPa)
Gas		Select compatible materials of construction for the gas
Source pressure		Vacuum to 1700 psig (11.7 MPa)
Proof pressure (Inlet)		2550 psig (17.6 MPa)
Burst pressure		8000 psig (55.2 MPa)
Maximum control pressure		150 psig (1.0 MPa)
Ambient and operating temperature		-40 to 71 °C (No freezing) *1)
Cv		0.65
Leak rate	Inboard leakage	$2x10^{-11}$ Pa·m³/sec
	Outboard leakage	$2x10^{-10}$ Pa·m³/sec *2)
Across the seat leak		$4x10^{-9}$ Pa·m³/sec *3)
Surface finish		Ra 10 µin. (0.25 µm) Option: 25 µin. (0.62 µm)
Connections		Face seal, Tube weld
Control pressure port		NPT 1/8 inch
Bonnet port		NPT 1/8 inch
Supply pressure effect		3.5 psig (0.024 MPa) rise in delivery pressure per 100 psig (0.7 MPa) source pressure drop
Installation		Bottom mount
Internal volume		1.20 in³ (19.6 cm³)

*1) -10 to 90 °C for Vespel® seat.
*2) Tested with Helium gas inlet pressure 1500 psig (10.5 MPa).
*3) Tested with Helium gas inlet pressure 1000 psig (7 MPa).

Options

1. High flow

Higher flow capacity with internal changes only, no change in external dimensions. Changes from the standard type are:

Option	Other Parameters	AZ12PA
HF	**Delivery pressure**	7 to 150 psig (0.05 to 1.0 MPa) *)
	Cv	1.1
	Supply pressure effect	4.2 psig (0.029 MPa) rise in delivery pressure per 100 psig (0.7 MPa) source pressure drop

2. High inlet pressure

Changes from the standard type are:

Option	Other Parameters	AZ12PA
HR	**Delivery pressure**	7 to 150 psig (0.05 to 1.0 MPa) *)
	Source pressure	Vacuum to 3000 psig (20.7 MPa)
	Proof pressure (Inlet)	4500 psig (31 MPa)
	Burst pressure	9000 psig (62 MPa)

*) HF and HR option will not achieve rated outlet pressures at all inlet pressures.

Wetted Parts Material

Wetted Parts	S	SHP
Body	316L SS	
Surface finish	Electropolish + Passivation	
Poppet	316L SS	Hastelloy® C-22
Diaphragm	Hastelloy® C-22	
Nozzle	316L SS	
Seat	PCTFE (Option: Vespel®)	PCTFE

Dimensions

inch (mm)

AZ12PA

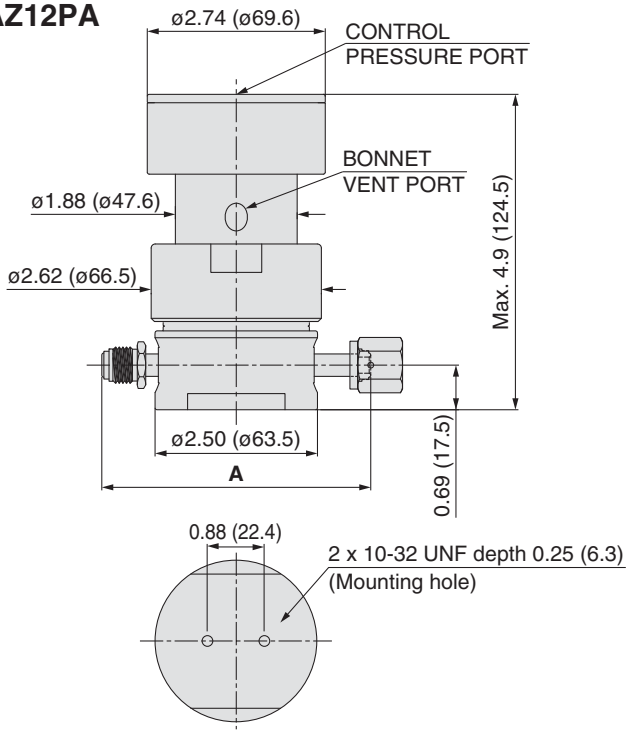

Connections	A	
	inch	(mm)
FV4	4.30	(109.2)
MV4		
FV6	5.22	(132.6)
MV6		
TW6	4.00	(101.6)
FV8	5.22	(132.6)
MV8		
TW8	4.34	(110.2)

Hastelloy® is a registered trademark of Haynes International.
Vespel® is a registered trademark of DuPont.

Flow Characteristics

AZ12PA

Inlet pressure: ---- 100 psig (0.69 MPa) —— 60 psig (0.41 MPa)
1/2 inch connections

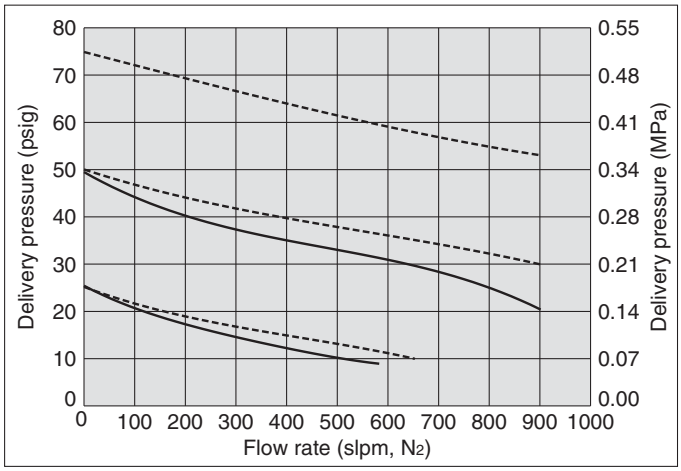

AZ12PA

Inlet pressure: ---- 1700 psig (11.7 MPa)
—— 250 psig (1.7 MPa)

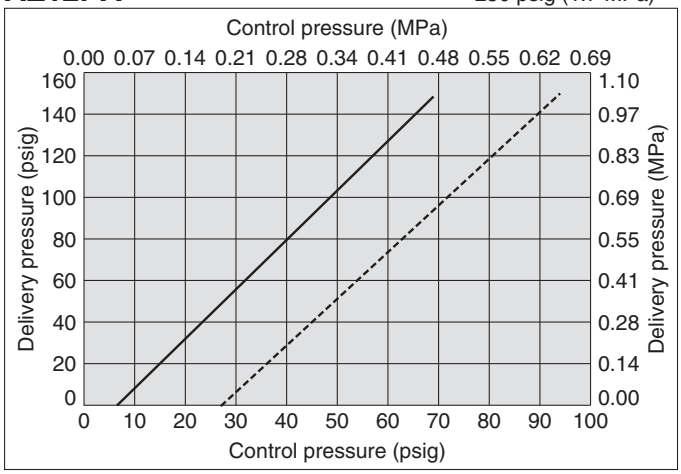

Pneumatic Actuation Pressure Regulator | Low flow

Series AK10PA

- **Actuation control pressure isolated from process gas by two seals**
- **Body material: 316 SS**
- **High inlet pressure type: Max. 3500 psig (24.1 MPa)**
- **Flow capacity Standard: to 30 slpm**
  HF (Option): to 120 slpm
- **Hastelloy internals available for corrosion resistance**
- **100 psig (0.69 MPa) outlet pressure achievable with 80 psig (0.55 MPa) control pressure or less**

How to Order

AK10 PA S 4PL 4 4 0 0 ☐ ☐ ☐ ☐

Port Number: ① ② ③ ④ ⑤

Delivery pressure

Code	Delivery pressure
PA	7 to 150 psig (0.05 to 1.0 MPa)

Material

Code	Body	Poppet	Diaphragm
B	Brass	316 SS	316 SS
S	316 SS		
SH		Hastelloy® C-22	Hastelloy® C-22

Ports

Code	Ports	Material B	Material S, SH
2P	Refer to the following porting configurations.		●
3P			●
4P			●
4PL		●	●
5PC		●	●

Connections (Inlet①, Outlet②)

Code	Connections
4	NPT 1/4 inch
4T	1/4 inch compression
6T	3/8 inch compression

Pressure gauge unit ∗2)

Code	Unit
No code	psig/bar
MPA	MPa

∗2) Pressure gauge unit MPa or psig/bar selectable. However under Japanese regulation, only MPa is available in Japan.

Gauge port (Extra bottom outlet③, Inlet④, Outlet⑤)

Code	Pressure gauge ∗1) psig/bar unit	Pressure gauge ∗1) MPa unit
No code	No gauge port	
0	No pressure gauge (Connections: 1/4 inch NPT)	
V3	-30 in.Hg to 30 psig	-0.1 to 0.2 MPa
1	-30 in.Hg to 100 psig	-0.1 to 0.7 MPa
2	0 to 200 psig	0 to 1.5 MPa
10	0 to 1000 psig	0 to 7 MPa
40	0 to 4000 psig	0 to 28 MPa

∗1) Other range available. Refer to gauge guide (P.94,95).

Option

Code	Specification
No code	Standard (Cv:0.09)
HF	High flow (Cv:0.15) ∗6)

∗6) Full outlet pressure rating may not be achieved at all inlet pressure.

Seat material

Code	Material
No code	PCTFE (Standard)
VS	Vespel® ∗3)
PK	PEEK
TF	PTFE ∗4) ∗5)

∗3) Not available with SH material.
∗4) Source pressure rating is limited to 300psig (2.1MPa) or less.
∗5) PTFE seats reduce seat abrasion for flow cycle application. Gas permeation is greater with PTFE than PCTFE.

Porting Configuration (Top View)

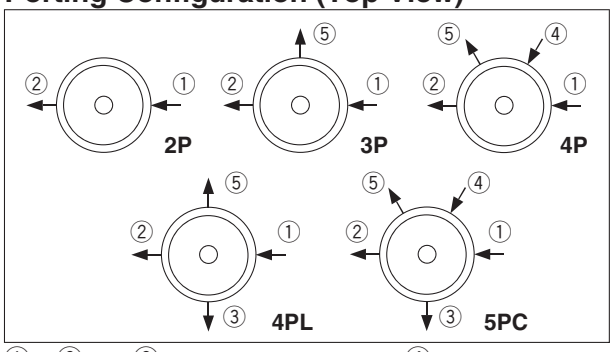

①IN ②OUT ③Extra bottom port (Outlet) ④Gauge port (Inlet) ⑤Gauge port (Outlet)

Specifications

Operating Parameters	AK10PA
Delivery pressure	7 to 150 psig (0.05 to 1.0 MPa)
Gas	Select compatible materials of construction for the gas
Source pressure	Vacuum to 3500 psig (24.1 MPa) ∗1)
Proof pressure (Inlet)	4500 psig (30.7 MPa)
Burst pressure	10000 psig (69 MPa)
Maximum control pressure	150 psig (1.0 MPa)
Ambient and operating temperature	-40 to 71 °C (No freezing) ∗2)
Cv	0.09
Leak rate	1 x 10^{-10} Pa·m^3/sec
Connections	NPT female, Compression
Control pressure port	NPT 1/8 inch
Bonnet port	NPT 1/8 inch
Supply pressure effect	0.38 psig (0.0026 MPa) rise in delivery pressure per 100 psig (0.7 Mpa) source pressure drop
Installation	Bottom mount
Internal volume	0.49 in^3 (8 cm^3)

∗1) Max. 300 psig (2.1 MPa) for PTFE seat.
∗2) -10 to 90 °C for Vespel® and PEEK seat. Optional ambient and operating temperature range available. Please contact SMC.

Option

High flow

Higher flow capacity with internal changes only, no change in external dimensions. Changes from the standard type are:

Option	Other Parameters	AK10PA
HF	**Delivery pressure**	7 to 150 psig (0.05 to 1.0 MPa) *)
	Cv	0.15
	Supply pressure effect	0.75 psig (0.0052 MPa) rise in delivery pressure per 100 psig (0.7 MPa) source pressure drop

*) HF option will not achieve rated outlet pressure at all inlet pressures.

Wetted Parts Material

Wetted Parts	B	S	SH
Body	Brass	316 SS	
Poppet	316 SS		Hastelloy® C-22
Diaphragm	316 SS		Hastelloy® C-22
Seat	PCTFE (Option: Vespel®, PEEK, PTFE)		PCTFE (Option: PEEK, PTFE)

Dimensions

inch (mm)

AK10PA

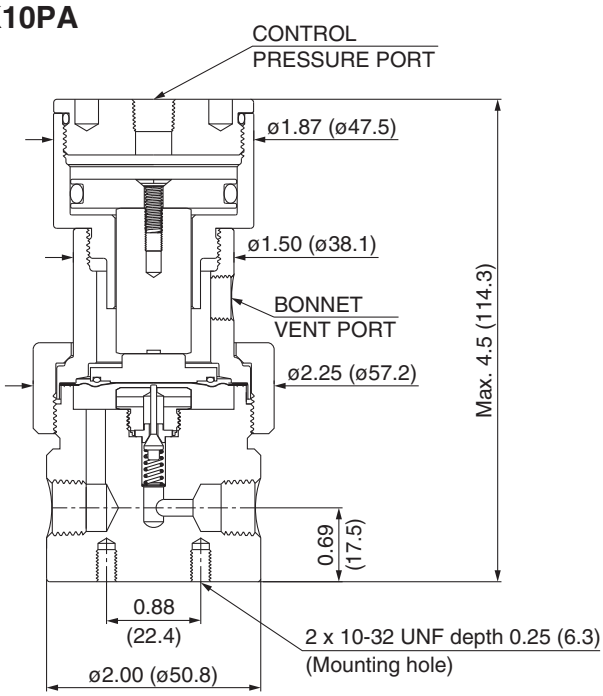

Flow Characteristics

AK10PA

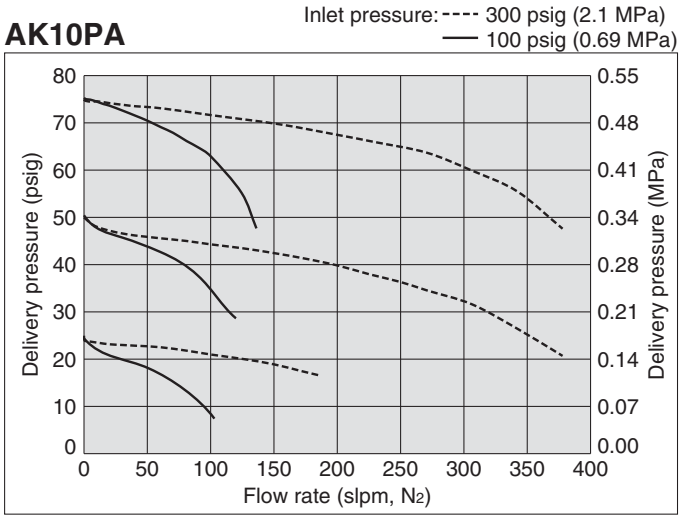

AK10PA

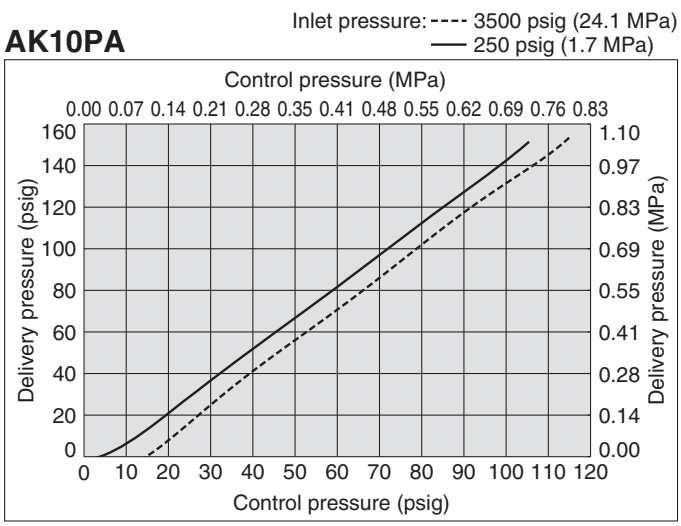

Hastelloy® is a registered trademark of Haynes International.
Vespel® is a registered trademark of DuPont.

Pneumatic Actuation Pressure Regulator

Low flow (Tied-diaphragm)

Series AK15PA

- **Actuation control pressure isolated from process gas by two seals**
- **Body material: 316L SS secondary remelt**
- **High inlet pressure type: Max. 3500 psig (24.1 MPa)**
- **Flow capacity Standard: to 30 slpm**
- **Hastelloy internals available for corrosion resistance**
- **100 psig (0.69 MPa) outlet pressure achievable with 80 psig (0.55 MPa) control pressure or less**

How to Order

AK15 PA S 4PL 4 4 0 0 ☐ ☐ ☐

Port Number: ① ② ③ ④ ⑤

Delivery pressure

Code	Delivery pressure
PA	7 to 150 psig (0.05 to 1.0 MPa)

Material

Code	Body	Poppet	Diaphragm
B	Brass	316 SS	316 SS
S	316 SS		
SH		Hastelloy® C-22	Hastelloy® C-22

Ports

Code	Ports	Material B	Material S, SH
2P	Refer to the following porting configurations.		●
3P			●
4PL		●	●
5PC		●	●

Connections (Inlet①, Outlet②)

Code	Connections
4	NPT 1/4 inch
4T	1/4 inch compression
6T	3/8 inch compression

Gauge port (Extra bottom outlet③, Inlet④, Outlet⑤)

Code	Pressure gauge *1) psig/bar unit	Pressure gauge *1) MPa unit
No code	No gauge port	
0	No pressure gauge (Connections: 1/4 inch NPT)	
V3	-30 in.Hg to 30 psig	-0.1 to 0.2 MPa
1	-30 in.Hg to 100 psig	-0.1 to 0.7 MPa
2	0 to 200 psig	0 to 1.5 MPa
10	0 to 1000 psig	0 to 7 MPa
40	0 to 4000 psig	0 to 28 MPa

*1) Other range available. Refer to gauge guide (P.94,95).

Seat material

Code	Material
No code	PCTFE (Standard)
VS	Vespel® *3)
PK	PEEK

*3) Not available with SH material.

Pressure gauge unit *2)

Code	Unit
No code	psig/bar
MPA	MPa

*2) Pressure gauge unit MPa or psig/bar selectable. However under Japanese regulation, only MPa is available in Japan.

Porting Configuration (Top View)

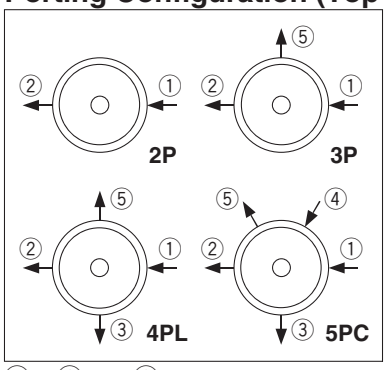

①IN ②OUT ③Extra bottom port (Outlet)
④Gauge port (Inlet) ⑤Gauge port (Outlet)

Specifications

Operating Parameters	AK15PA
Delivery pressure	7 to 150 psig (0.05 to 1.0 MPa)
Gas	Select compatible materials of construction for the gas
Source pressure	Vacuum to 3500 psig (24.1 MPa)
Proof pressure (Inlet)	4500 psig (30.7 MPa)
Burst pressure	10000 psig (69 MPa)
Maximum control pressure	150 psig (1.0 MPa)
Ambient and operating temperature	-40 to 71 °C (No freezing) *)
Cv	0.09
Leak rate	1 x 10^{-10} Pa·m^3/sec
Connections	NPT female, Compression
Control pressure port	NPT 1/8 inch
Bonnet port	NPT 1/8 inch
Supply pressure effect	0.41 psig (0.0028 MPa) rise in delivery pressure per 100 psig (0.7 MPa) source pressure drop
Installation	Bottom mount
Internal volume	0.53 in^3 (8.7 cm^3)

*) -10 to 90 °C for Vespel® and PEEK seat. Optional ambient and operating temperature range available. Please contact SMC.

Wetted Parts Material

Wetted Parts	B	S	SH
Body	Brass	316 SS	
Poppet	316 SS		Hastelloy® C-22
Diaphragm	316 SS		Hastelloy® C-22
Seat	PCTFE (Option: Vespel®, PEEK)		PCTFE (Option: PEEK)

Dimensions

inch (mm)

AK15PA

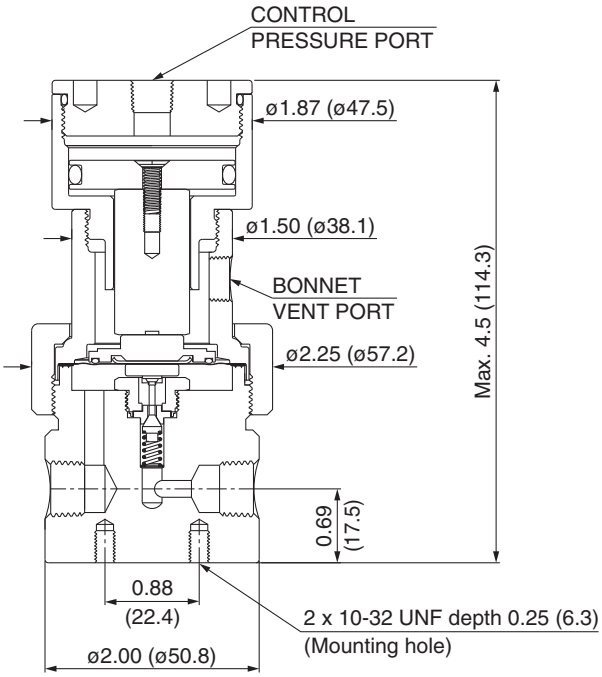

Flow Characteristics

AK15PA

Inlet pressure: ---- 300 psig (2.1 MPa)
—— 100 psig (0.69 MPa)

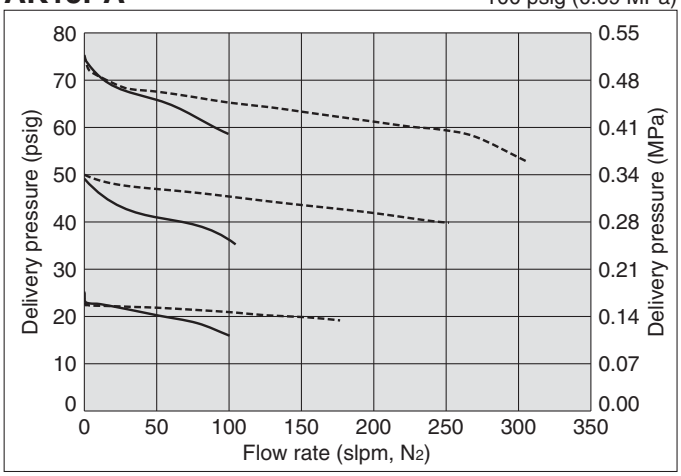

AK15PA

Inlet pressure: ---- 3500 psig (24.1 MPa)
—— 250 psig (1.7 MPa)

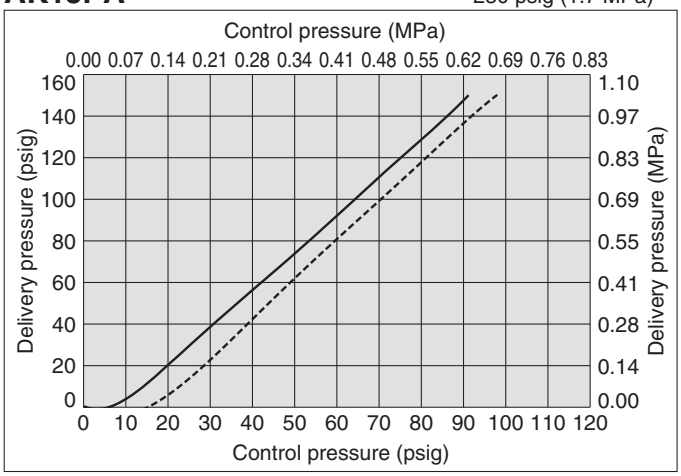

Hastelloy® is a registered trademark of Haynes International.
Vespel® is a registered trademark of DuPont.

Pneumatic Actuation Pressure Regulator

Intermediate flow (Tied-diaphragm)

Series AK14PAT

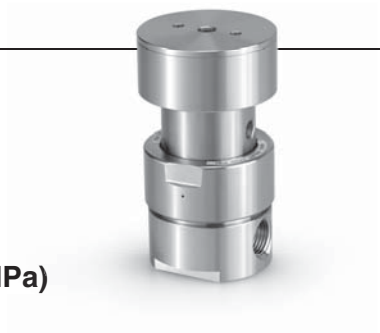

- **Actuation control pressure isolated from process gas by two seals**
- **Body material: 316 SS**
- **High inlet pressure type Standard: Max. 2300 psig(15.9 MPa)**
  HR (option): Max. 3000 psig (20.7 MPa)
- **Flow capacity: to 400 slpm**
- **Hastelloy internals standard**
- **100 psig (0.69 MPa) outlet pressure achievable with 80 psig (0.55 MPa)**

How to Order

AK14 PA T S 4PL 6 6 0 0 □ □ □ □

Port Number: ① ② ③ ④ ⑤

Delivery pressure

Code	Delivery pressure
PA	7 to 150 psig (0.05 to 1.0 MPa)

Material

Code	Body	Poppet	Diaphragm	Nozzle
B	Brass	Hastelloy® C-22	Hastelloy® C-22	316 SS
S	316 SS			
SH				Hastelloy® C-22

Ports

Code	Ports	Material B	Material S, SH
2P	Refer to the following porting configurations.		●
3P			●
4PL		●	●
5PC		●	●

Porting Configuration (Top View)

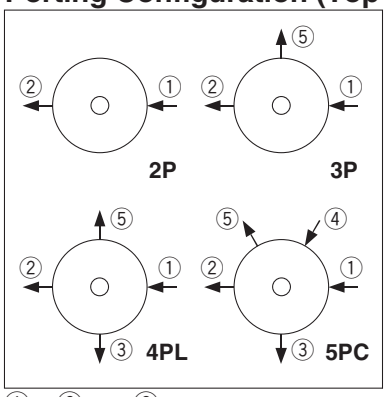

①IN ②OUT ③Extra bottom port (Outlet)
④Gauge port (Inlet) ⑤Gauge port (Outlet)

Connections (Inlet①, Outlet②)

Code	Connections
4	NPT 1/4 inch
6	NPT 3/8 inch
8	NPT 1/2 inch
4T	1/4 inch compression
6T	3/8 inch compression
8T	1/2 inch compression

Gauge port (Extra bottom outlet③, Inlet④, Outlet⑤)

Code	Pressure gauge *1) psig/bar unit	Pressure gauge *1) MPa unit
No code	No gauge port	
0	No pressure gauge (Connections: 1/4 inch NPT)	
V3	-30 in.Hg to 30 psig	-0.1 to 0.2 MPa
1	-30 in.Hg to 100 psig	-0.1 to 0.7 MPa
2	0 to 200 psig	0 to 1.5 MPa
10	0 to 1000 psig	0 to 7 MPa
40	0 to 4000 psig	0 to 28 MPa

*1) Other range available. Refer to gauge guide (P.94,95).

Pressure gauge unit *2)

Code	Unit
No code	psig/bar
MPA	MPa

*2) Pressure gauge unit MPa or psig/bar selectable. However under Japanese regulation, only MPa is available in Japan.

Seat material

Code	Material
No code	PCTFE (Standard)
VS	Vespel® *3)

*3) Not available with SH material.

Option

Code	Specification
No code	Standard
HR	High inlet pressure *4) (Max. inlet pressure 3000 psig (20.7 MPa))

*4) Full outlet pressure rating may not be achieved at all inlet pressure.

Specifications

Operating Parameters	AK14PAT
Delivery pressure	7 to 150 psig (0.05 to 1.0 MPa)
Gas	Select compatible materials of construction for the gas
Source pressure	Vacuum to 2300 psig (15.9 MPa)
Proof pressure (Inlet)	4000 psig (27.6 MPa)
Burst pressure	8000 psig (55.2 MPa)
Maximum control pressure	150 psig (1.0 MPa)
Ambient and operating temperature	-40 to 71°C (No freezing) *)
Cv	0.45
Leak rate	1 x 10^{-10} Pa·m³/sec
Connections	NPT female, Compression
Control pressure port	NPT 1/8 inch
Bonnet port	NPT 1/8 inch
Supply pressure effect	1.6 psig (0.011 MPa) rise in delivery pressure per 100 psig (0.7 MPa) source pressure drop
Installation	Bottom mount
Internal volume	1.14 in³ (18.7 cm³)

*) -10 to 90 °C for Vespel® seat.

Option

High inlet pressure

Changes from the standard type are:

Option	Other Parameters	AK14PAT
HR	**Delivery pressure**	7 to 150 psig (0.05 to 1.0 MPa) *)
	Source pressure	Vacuum to 3000 psig (20.7 MPa)
	Proof pressure (Inlet)	4500 psig (31 MPa)
	Burst pressure	9000 psig (62 MPa)

*) HR option will not achieve rated outlet pressure at all inlet pressures.

Wetted Parts Material

Wetted Parts	B	S	SH
Body	Brass	316 SS	
Poppet	Hastelloy® C-22		
Diaphragm	Hastelloy® C-22		
Nozzle	316 SS		Hastelloy® C-22
Seat	PCTFE (Option: Vespel®)		PCTFE

Dimensions

inch (mm)

AK14PAT

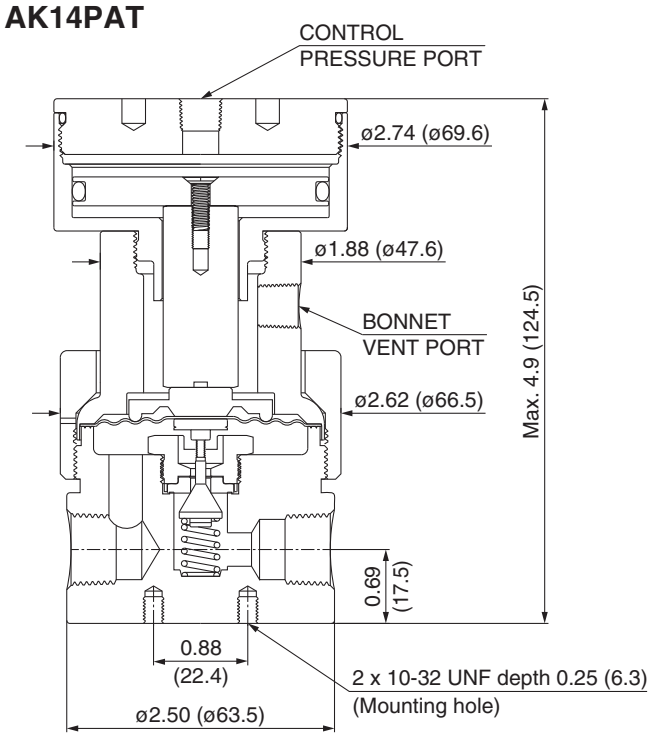

Flow Characteristics

AK14PAT

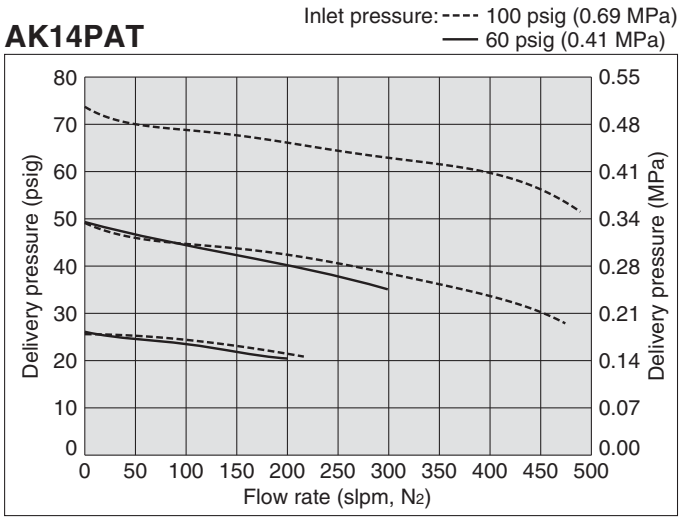

AK14PAT

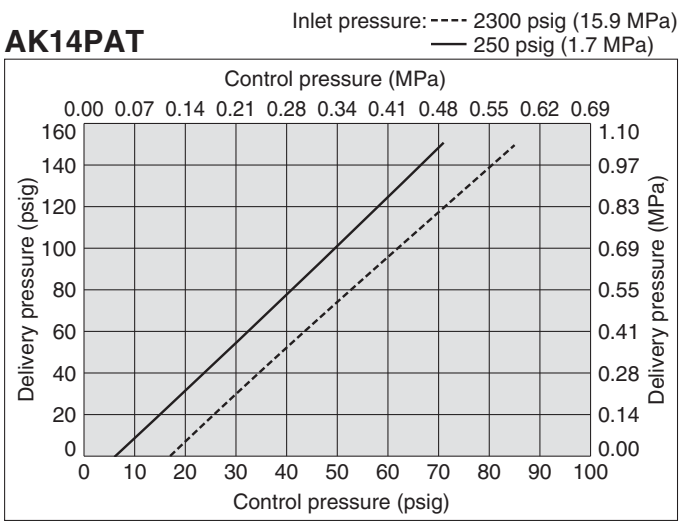

Hastelloy® is a registered trademark of Haynes International.
Vespel® is a registered trademark of DuPont.

Pneumatic Actuation Pressure Regulator

High flow (Tied-diaphragm)

Series AK12PA

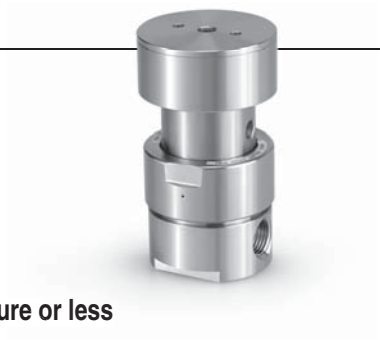

- **Actuation control pressure isolated from process gas by two seals**
- **Body material: 316 SS**
- **High inlet pressure type Standard: Max. 1700 psig(11.7 MPa)**
  HR (option): Max. 3000 psig (20.7 MPa)
- **Flow capacity Standard: to 800 slpm**
  HF (Option): to 1000 slpm
- **Hastelloy internals available for corrosion resistance**
- **100 psig (0.69 MPa) outlet pressure achievable with 80 psig (0.55 MPa) control pressure or less**

How to Order

Port Number ① ② ③ ④ ⑤

AK12 PA S 4PL 8 8 0 0 □ □ □ □

Delivery pressure

Code	Delivery pressure
PA	7 to 150 psig (0.05 to 1.0 MPa)

Material

Code	Body	Poppet	Diaphragm
B	Brass	316 SS	Hastelloy® C-22
S	316 SS		
SH		Hastelloy® C-22	

Ports

Code	Ports	Material B	Material S, SH
2P	Refer to the following porting configurations.		●
3P			●
4PL		●	●
5PC		●	●

Porting Configuration (Top View)

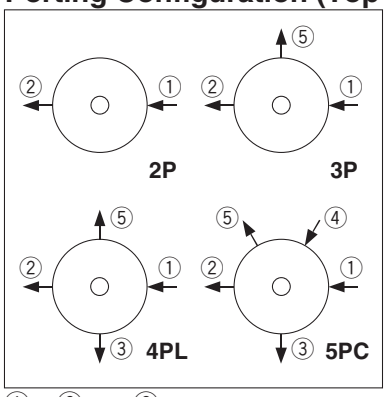

①IN ②OUT ③Extra bottom port (Outlet)
④Gauge port (Inlet) ⑤Gauge port (Outlet)

Connections (Inlet①, Outlet②)

Code	Connections
4	NPT 1/4 inch
6	NPT 3/8 inch
8	NPT 1/2 inch
4T	1/4 inch compression
6T	3/8 inch compression
8T	1/2 inch compression

Pressure gauge unit *2)

Code	Unit
No code	psig/bar
MPA	MPa

*2) Pressure gauge unit MPa or psig/bar selectable. However under Japanese regulation, only MPa is available in Japan.

Gauge port (Extra bottom outlet③, Inlet④, Outlet⑤)

Code	Pressure gauge *1) psig/bar unit	Pressure gauge *1) MPa unit
No code	No gauge port	
0	No pressure gauge (Connections: 1/4 inch NPT)	
V3	-30 in.Hg to 30 psig	-0.1 to 0.2 MPa
1	-30 in.Hg to 100 psig	-0.1 to 0.7 MPa
2	0 to 200 psig	0 to 1.5 MPa
10	0 to 1000 psig	0 to 7 MPa
40	0 to 4000 psig	0 to 28 MPa

*1) Other range available. Refer to gauge guide (P.94,95).

Option

Code	Specification
No code	Standard (Cv:0.65)
HF	High flow (Cv:1.1) *4)
HR	High inlet pressure *4) (Max. inlet pressure 3000 psig (20.7 MPa))

*4) Full outlet pressure rating may not be achieved at all inlet pressure.

Seat material

Code	Material
No code	PCTFE (Standard)
VS	Vespel® *3)

*3) Not available with SH material.

Specifications

Operating Parameters	AK12PA
Delivery pressure	7 to 150 psig (0.05 to 1.0 MPa)
Gas	Select compatible materials of construction for the gas
Source pressure	Vacuum to 1700 psig (11.7 MPa)
Proof pressure (Inlet)	2550 psig (17.6 MPa)
Burst pressure	8000 psig (55.2 MPa)
Maximum control pressure	150 psig (1.0 MPa)
Ambient and operating temperature	-40 to 71 °C (No freezing) *)
Cv	0.65
Leak rate	1 x 10^{-10} Pa·m^3/sec
Connections	NPT female, Compression
Supply pressure effect	3.5 psig (0.024 MPa) rise in delivery pressure per 100 psig (0.7 MPa) source pressure drop
Installation	Bottom mount
Internal volume	1.32 in^3 (21.6 cm^3)

*) -10 to 90 °C for Vespel® seat. Optional ambient and operating temperature range available. Please contact SMC.

Options

1. High flow

Higher flow capacity with internal changes only, no change in external dimensions. Changes from the standard type are:

Option	Other Parameters	AK12PA
HF	**Delivery pressure**	7 to 150 psig (0.05 to 1.0 MPa) *)
	Cv	1.1
	Supply pressure effect	4.2 psig (0.029 MPa) rise in delivery pressure per 100 psig (0.7 MPa) source pressure drop

2. High inlet pressure

Changes from the standard type are:

Option	Other Parameters	AK12PA
HR	**Delivery pressure**	7 to 150 psig (0.05 to 1.0 MPa) *)
	Source pressure	Vacuum to 3000 psig (20.7 MPa)
	Proof pressure (Inlet)	4500 psig (31 MPa)
	Burst pressure	9000 psig (62 MPa)

*) HR and HF options will not achieve rated outlet pressure at all inlet pressures.

Wetted Parts Material

Wetted Parts	B	S	SH
Body	Brass	316 SS	
Poppet	316 SS		Hastelloy® C-22
Diaphragm	Hastelloy® C-22		
Seat	PCTFE (Option: Vespel®)		PCTFE

Dimensions

inch (mm)

AK12PA

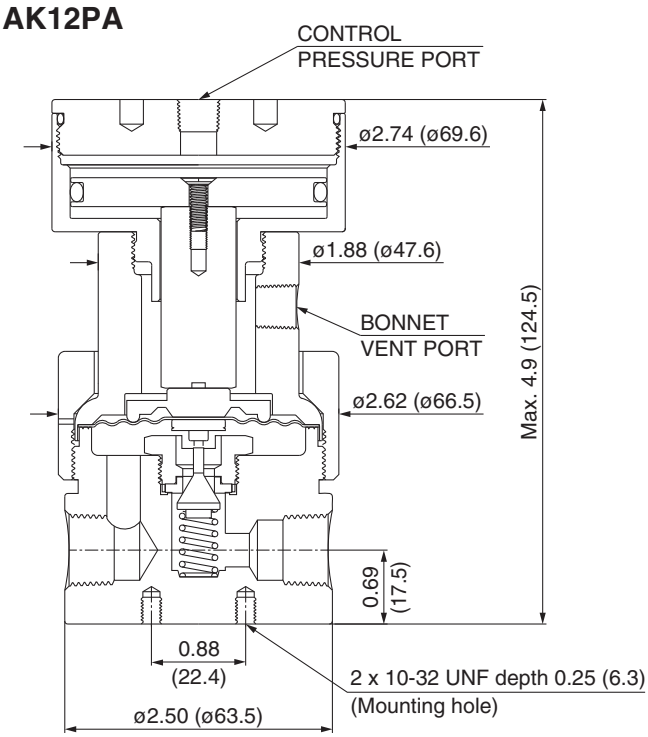

Flow Characteristics

AK12PA

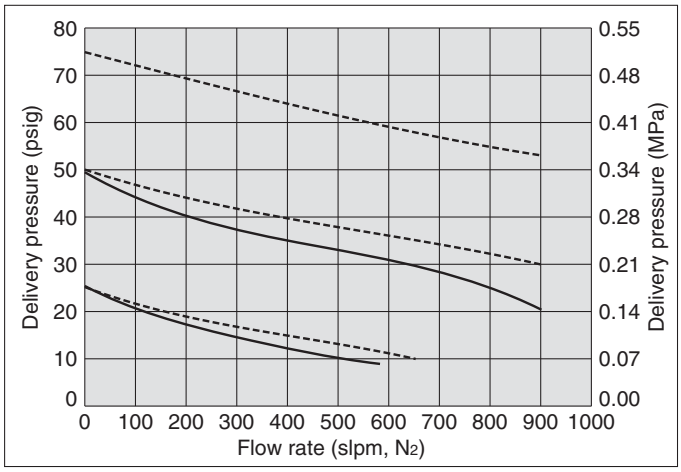

AK12PA

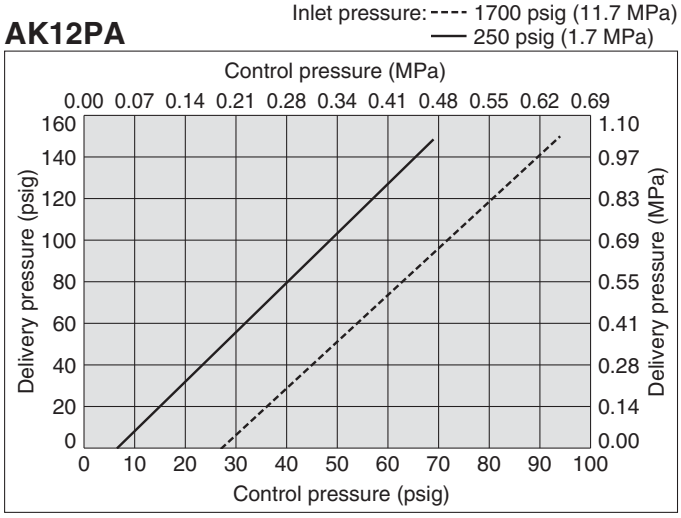

Hastelloy® is a registered trademark of Haynes International.
Vespel® is a registered trademark of DuPont.

Regulator
Pressure Gauges Guide

For AP/SL/AZ series (Installed before shipment *1) / Order separately)

Specifications

Installation		Lower mount
Gas		Select compatible materials of construction for the gas
Connections		1/4 inch face seal (Female)
Temperature range		-40 to 60 °C (No freezing)
Accuracy		25% to 75% of the scale: ±1%F.S. Other than above: ±2%F.S. (ASME B40.1 Grade A)
Cleanliness		ASME B40.1 level IV
No oil		No oil
Material	**Case**	Stainless steel
	Window	Polycarbonate
	Socket	316L SS
	Bourdon tube	316L SS

Model

Regulator Code *2)		Pressurerange	Unit	Part number *3)
gauge port	unit			
V3	**(No code)**	-30 in.Hg to 30 psig	psig/bar *4)	**00-83000023**
L		-30 in.Hg to 60 psig		**00-83000026**
1		-30 in.Hg to 100 psig		**00-83000021**
H		-30 in.Hg to 160 psig		**00-83000116**
2		0 to 200 psig		**00-83000020**
4		0 to 400 psig		**00-83000007**
10		0 to 1000 psig		**00-83000022**
40		0 to 4000 psig		**00-83000024**
V3	**MPA**	-0.1 to 0.2 MPa	MPa	**00-83000304**
L		-0.1 to 0.4 MPa		**00-83000305**
1		-0.1 to 0.7 MPa		**00-83000300**
H		-0.1 to 1.1 MPa		**00-83000297**
2		0 to 1.4 MPa		**00-83000299**
4		0 to 3 MPa		**00-83000301**
10		0 to 7 MPa		**00-83000302**
40		0 to 28 MPa		**00-83000303**

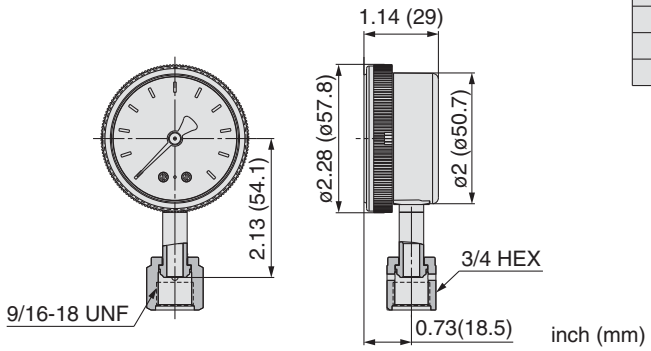

For AK/BP series (Installed before shipment / Order separately)

Stainless steel / Lower mount

Specifications

Installation		Lower mount
Gas		Select compatible materials of construction for the gas
Connections		NPT 1/4 inch
Temperature range		-40 to 60 °C (No freezing)
Accuracy		25% to 75% of the scale: ±2%F.S. Other than above: ±3%F.S. (ASME B40.1 Grade B or better)
Cleanliness		ASME B40.1 level IV
No oil		No oil
Material	**Case**	Stainless steel
	Window	Polycarbonate
	Socket	316L SS
	Bourdon tube	316L SS

Model

Regulator Code *2)			Pressure range	Unit	Part number *3)
material	gauge port	unit			
S SH	**V15**	**(No code)**	-30 in.Hg to 15 psig	psig/bar *4)	**00-83000102**
	V3		-30 in.Hg to 30 psig		**00-83000184**
	L		-30 in.Hg to 60 psig		**00-83000181**
	1		-30 in.Hg to 100 psig		**00-83000182**
	H		-30 in.Hg to 160 psig		**00-83000196**
	V2		-30 in.Hg to 200 psig		**00-83000033**
	2		0 to 200 psig		**00-83000193**
	4		0 to 400 psig		**00-83000194**
	10		0 to 1000 psig		**00-83000187**
	30		0 to 3000 psig		**00-83000234**
	40		0 to 4000 psig		**00-83000183**
	V15	**MPA**	-0.1 to 0.1 MPa	MPa	**00-83000287**
	V3		-0.1 to 0.2 MPa		**00-83000288**
	L		-0.1 to 0.4 MPa		**00-83000289**
	1		-0.1 to 0.7 MPa		**00-83000290**
	H		-0.1 to 1.1 MPa		**00-83000291**
	V2		-0.1 to 1.4 MPa		**00-83000292**
	2		0 to 1.5 MPa		**00-83000286**
	4		0 to 3 MPa		**00-83000285**
	10		0 to 7 MPa		**00-83000284**
	30		0 to 21 MPa		**00-83000283**
	40		0 to 28 MPa		**00-83000282**

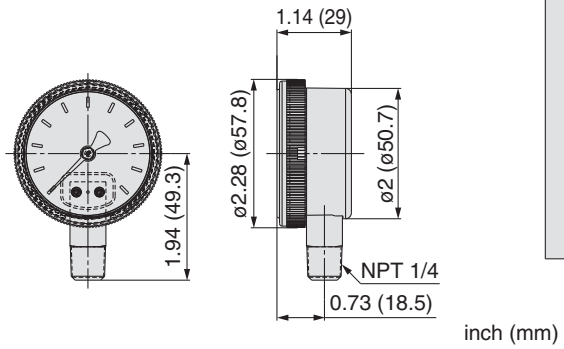

*1) If one prefers shipment with the pressure gauges installed on the regulator, the material of gasket to be used on the connections will be Nickel (no plated). Please contact SMC for details if one prefers changing this material.
*2) When pressure gauge needs to be assembled with regulator when shipment, put this code as gauge port in How to Order.

For AK/BP series (Installed before shipment / Order separately)

Stainless steel / Center back mount

Specifications

Installation		Center back mount
Gas		Select compatible materials of construction for the gas
Connections		NPT 1/4 inch
Temperature range		-40 to 60 °C (No freezing)
Accuracy		25% to 75% of the scale: ±2%F.S. Other than above: ±3%F.S. (ASME B40.1 Grade B or better)
Cleanliness		ASME B40.1 level IV
No oil		No oil
Material	**Case**	Stainless steel
	Window	Polycarbonate
	Socket	316L SS
	Bourdon tube	316L SS

Model

Regulator Code	Pressure range	Unit	Part number *3)
*5)	-30 in.Hg to 100 psig	psig/bar *4)	**00-83000224**
	-30 in.Hg to 160 psig		**00-83000272**
	-0.1 to 0.7 MPa	MPa	**00-83000293**
	-0.1 to 1.1 MPa		**00-83000294**

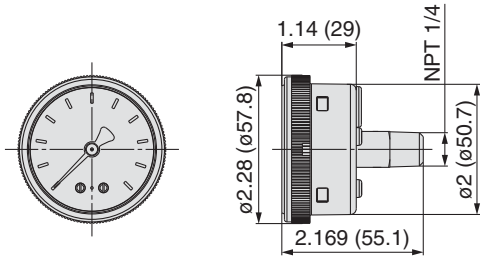

inch (mm)

Brass / Lower mount

Specifications

Installation		Lower mount
Gas		Select compatible materials of construction for the gas
Connections		NPT 1/4 inch
Temperature range		-40 to 60 °C (No freezing)
Accuracy		25% to 75% of the scale: ±2%F.S. Other than above: ±3%F.S. (ASME B40.1 Grade B or better)
Cleanliness		ASME B40.1 level IV
No oil		No oil
Material	**Case**	Brass
	Window	Polycarbonate
	Socket	Brass
	Bourdon tube	Phosphor bronze

Model

Regulator Code *2)			Pressure range	Unit	Part number *3)
material	gauge port	unit			
B	**V3**	**(No code)**	-30 in.Hg to 30 psig	psig/bar *4)	**00-83000265**
	L		-30 in.Hg to 60 psig		**00-83000177**
	1		-30 in.Hg to 100 psig		**00-83000178**
	H		-30 in.Hg to 160 psig		**00-83000239**
	2		0 to 200 psig		**00-83000218**
	4		0 to 400 psig		**00-83000205**
	10		0 to 1000 psig		**00-83000186**
	40		0 to 4000 psig		**00-83000179**
	V3	**MPA**	-0.1 to 0.2 MPa	MPa	**00-83000278**
	L		-0.1 to 0.4 MPa		**00-83000279**
	1		-0.1 to 0.7 MPa		**00-83000280**
	H		-0.1 to 1.1 MPa		**00-83000281**
	2		0 to 1.5 MPa		**00-83000277**
	4		0 to 3 MPa		**00-83000276**
	10		0 to 7 MPa		**00-83000275**
	40		0 to 28 MPa		**00-83000274**

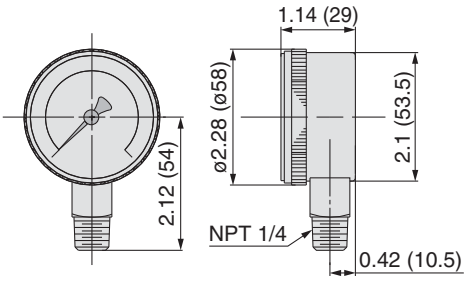

inch (mm)

*3) Part number of pressure gauge itself. Gauge are shipped separately.
*4) Under Japanese regulation, psig/bar unit gauge is not sold in Japan.
*5) Available for special order. Please contact SMC.

Process Gas Equipment / Regulator Specific Product Precautions

Be sure to read before handling. Refer to back cover for Safety Instructions and P. 145 and 146 and the "Operation Manual" for common precautions. Operation manual is available from the SMC web site. http://www.smcworld.com

Selection

⚠ Warning

1. Confirm the specifications.

When selecting the product, confirm the operating conditions, such as type of gas, operating pressure (inlet and outlet), flow rate, operating temperature etc., and use within the operating range specified in the catalog. The product may not be suitable for use with specific gases and applications/ environments. Check the compatibility of the product materials with the process gas.
Design the equipment and select the product by understanding the characteristics of gas.

2. Confirm allowable pressure of any pressure gauges.

When installing a pressure gauge to the product, operating pressure should not exceed the maximum allowable pressure of the pressure gauge.

Mounting

⚠ Warning

1. Confirm the mounting direction of the product.

The high pressure (inlet) port is labeled with an "HP" mark and the low pressure (outlet) port is labeled with an "LP" mark. In the case of two stage regulator, the monitor port of first stage outlet pressure is labeled with "MP" mark.
Make sure to connect the port labeled with "HP" mark, to the high pressure. If any of the ports, other than "HP", are connected to the high pressure, it may cause damage or gas leakage.

2. After installation, check internal leakage (leakage across seat) of the product.

Check internal leakage (leakage across seat) with inert gases such as nitrogen, etc., and select the most appropriate test method depending on the application. The following procedures are an example of how a test may be performed. It is intended as an overview and not as an all inclusive description.

1) Rotate the adjustment wheel counterclockwise (DECR) completely to relieve spring force. Then gradually open the valve at inlet side to supply gas to the regulator.
2) Close the valves on the inlet and outlet side and hold for at least 10 minutes. Then confirm the outlet pressure.
3) Rotate the adjustment wheel clockwise (INCR) until the outlet pressure reaches the outlet pressure setting. Then hold for at least 10 minutes and confirm the outlet pressure.

If outlet pressure continues increasing in steps 2) and 3) above, the regulator may have internal leakage (leakage across seat) and you should stop using the regulator immediately and contact SMC or sales representative.

3. Purge hazardous gases from system before removing regulator from system.

Before removing regulators from system, fully open regulator by turning adjustment wheel clockwise (INCR), and follow proper procedures to flush system with inert gas such as nitrogen to remove any residual hazardous gases.

Maintenance

⚠ Warning

1. If a regulator requires repair, contact SMC.

Operation

⚠ Warning

1. Do not use the regulator as shutoff valve or safety valve.

2. Do not rotate the adjustment wheel counterclockwise (DECR) under no flow conditions.

If the adjustment wheel is rotated counterclockwise (DECR) under no flow conditions but there is residual pressure remaining in outlet side, it may cause damage to the regulator. Decreasing of the setting pressure should be done under flow conditions.

3. Do not pressurize the regulator from outlet side. If high pressure, which exceeds the setting pressure, is supplied from outlet side, it may cause damage to the regulator.

4. Supply gas to the regulator.

Rotate the adjustment wheel counterclockwise (DECR) completely to relieve spring force. Then, gradually open the valve at inlet side to supply gas to the regulator. When operating the valve, do not stand in front of the regulator and pressure gauge. If the valve at inlet side is opened rapidly, high pressure gas might be supplied into outlet side of the regulator and it may cause severe damage or burst the device.

5. Adjust pressure.

When rotating the adjustment wheel clockwise (INCR), outlet pressure will increase.
In order to adjust precisely, the wheel should be adjusted at the desired flow conditions.

6. Decreasing the setting pressure under flow conditions.

When decreasing the setting pressure, make sure to open the valve at outlet side to keep flow conditions. When rotating the adjustment wheel counterclockwise (DECR) under flow conditions, setting pressure will decrease.

7. Stop using the regulator immediately if resonance occurs.

Loud audible noise as well as vibration of device or fluctuation of outlet pressure (resonance) may occur depending on operating conditions etc. If this situation occurs, stop using the regulator immediately and contact SMC or sales representative.

Process Gas Equipment / Back Pressure Regulator Specific Product Precautions

Be sure to read before handling. Refer to back cover for Safety Instructions and P. 145 and 146 and the "Operation Manual" for common precautions. Operation manual is available from the SMC web site. http://www.smcworld.com

Selection

⚠ Warning

1. Confirm the specifications.

When selecting the product, confirm the operating conditions, such as type of gas, operating pressure (inlet and outlet), flow rate, operating temperature etc., and use within the operating range specified in the catalog. Verify flow capacity of regulator and vent or return line, are large enough to vent off gas source without creating excessive backpressure. The product may not be suitable for use with specific gases and applications/environments. Check the compatibility of the product materials with the process gas.
Design the equipment and select the product by understanding the characteristics of gas.

2. Confirm allowable pressure of any pressure gauges.

When installing pressure gauges to the product, operating pressure should not exceed the maximum allowable pressure of the pressure gauge.

Mounting

⚠ Warning

1. Confirm the mounting direction of the product.

The high pressure (inlet) port is labeled with an "IN" mark and the low pressure (outlet) port is labeled with an "OUT" mark. Make sure to connect the port labeled with "IN" mark, to the high pressure. If any of the ports, other than "IN", is connected to the high pressure, it may cause damage or gas leakage.

Maintenance

⚠ Warning

1. If a back pressure regulator requires repair, contact SMC.

Operation

⚠ Warning

1. Do not use the back pressure regulator as shutoff valve or safety valve.

2. Pressure control

1) Rotate the adjustment wheel counterclockwise completely to relieve spring force.
2) Partially open the valve at inlet side to supply gas to the back pressure regulator.
3) Increase the inlet pressure to the setting pressure by rotating the adjustment wheel clockwise.
4) Continue opening the valve at inlet side monitoring the inlet pressure. When the inlet pressure increases above the setting pressure, rotate the adjustment wheel counterclockwise to relieve the inlet pressure to the setting pressure.
5) Open the valve at inlet side completely and confirm that the inlet pressure reaches the setting pressure.

3. Decreasing the setting pressure.

When decreasing the setting pressure, make sure to gradually rotate the adjustment wheel counterclockwise until the inlet pressure reaches the setting pressure.

4. Stop using the regulator immediately if resonance occurs.

Loud audible noise as well as vibration of device or fluctuation of outlet pressure (resonance) may occur depending on operating conditions, etc. If this situation occurs, stop using the regulator immediately and contact SMC or sales representative.

Diaphragm Valves

Diaphragm Valve for Ultra High Purity

Air operated type (For low pressure)

Series ***AP3500***

- **Suitable for UHP gas supply line**
- **Body material : 316L SS secondary remelt**
- **Pneumatically actuated normally closed or normally open**
- **LOTO option available as an option (AP3540)**
- **Indicator switch available as an option (AP3550)**

How to Order

AP 3 540 S □ 2PW FV4 FV4 □ □ □

(Inlet) (Outlet)

Size

Code	Cv
3	0.29

Model

Code	Status	Maximum operating pressure
540	Normally closed (N.C.)	125 psig (0.9 MPa)
550		250 psig (1.7 MPa)
580	Normally open (N.O.)	

Material

Code	Body material
S	316L SS secondary remelt
H	Hastelloy® C-22

Surface finish

Code	Surface finish Ra max
No code	15 µin. (0.4 µm) Standard
M	10 µin. (0.25 µm)
V	7 µin. (0.18 µm)
X	5 µin. (0.13 µm)

Ports

Code	Ports
2PW	2 ports

Optional portings and porting configurations available. Please refer to P.125.

Connections (Inlet, Outlet)

Code	Connections
FV4	1/4 inch face seal (Female)
MV4	1/4 inch face seal (Male)
TW4	1/4 inch tube weld
FV6	3/8 inch face seal (Female)
MV6	3/8 inch face seal (Male)
TW6	3/8 inch tube weld

Face to face dimension *1)

Code	Dimension
No code	2.12 inch (53.8 mm) Standard
1.75	1.75 inch (44.5 mm)

*1) Only applies to S material with TW4 connections.

Seat material

Code	Material
No code	PCTFE (Standard)
VS	Vespel® *2)

*2) Not available with H material.

Option (AP3550 only)

Code	Specification
No code	—
ISC	N.C. Indicator switch *3)
ISO	N.O. Indicator switch *4)

*3) Indication of closed status.
*4) Indication of opened status.

Specifications

Operating Parameters		AP3540	AP3550	AP3580
Status		Normally closed (N.C.)		Normally open (N.O.)
Gas		Select compatible materials of construction for the gas		
Operating pressure		Vacuum to 125 psig (0.9 MPa)	Vacuum to 250 psig (1.7 MPa)	
Proof pressure		1000 psig (6.9 MPa)		
Burst pressure		8000 psig (55.2 MPa)		
Ambient and operating temperature		-10 to 71 °C (No freezing) *1)		
Cv		0.29		
Leak rate	**Inboard leakage**	2×10^{-11} Pa·m³/sec		
	Outboard leakage	2×10^{-10} Pa·m³/sec *2)		
Across the seat leak		4×10^{-9} Pa·m³/sec *2)		
Surface finish		Ra max 15 µin. (0.4 µm)	Option: 10 µin. (0.25 µm), 7 µin. (0.18 µm), 5 µin. (0.13 µm)	
Connections		Face seal, Tube weld		
Actuation pressure		70 to 110 psig (0.48 to 0.76 MPa)		
Actuation port connection		NPT 1/8 inch	10-32 UNF thread	NPT 1/8 inch
Actuation port location		Top	Side	Top
Installation		Bottom mount		
Internal volume		0.06 in³ (1.07 cm³)		
Mass		0.68 kg *3)	0.82 kg *3)	0.68 kg *3)
LOTO (Lockout)		Option (Part number: AP PL 210) *4)	N/A	

*1) High temperature available. Please contact SMC.
*2) Tested with Helium gas inlet pressure 125 psig (0.9 MPa).
*3) Mass, including individual boxed weight, may vary depending on connections or options.
*4) Refer to the specification for options. (P.124)

Wetted Parts Material

Wetted Parts	S	H
Body	316L SS secondary remelt	Hastelloy® C-22
Surface finish	Electropolish + Passivation	Electropolish
Diaphragm	Elgiloy®	
Seat	PCTFE (Option: Vespel®)	PCTFE

Dimensions

inch (mm)

AP3500

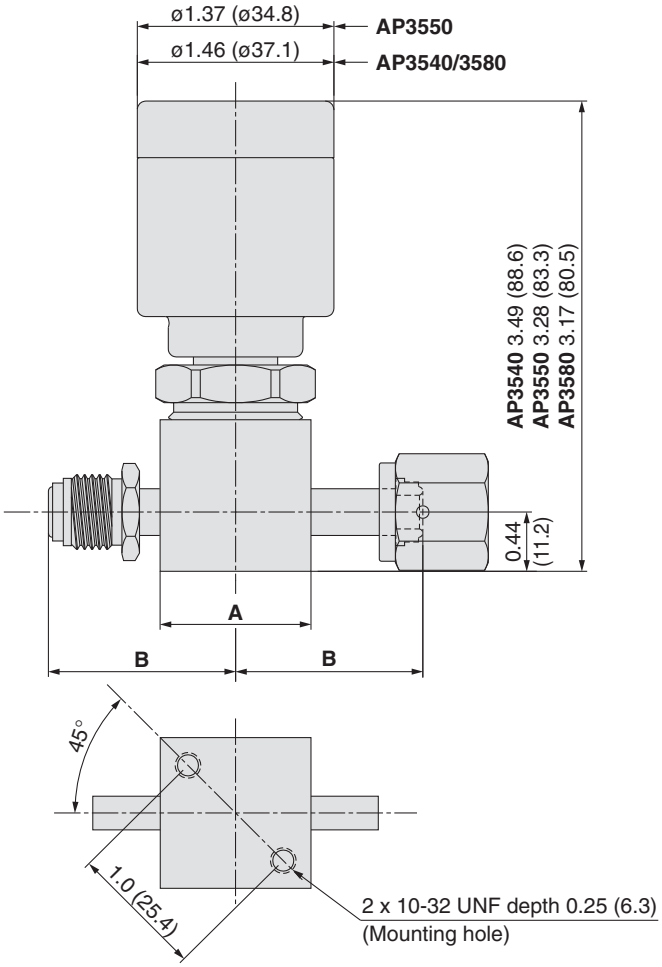

Bottom view

Material	Connections	A		B	
		inch	(mm)	inch	(mm)
S	FV4	1.12 sq.	(□28.4)	1.39	(35.3)
	MV4				
	TW4			1.06	(26.9)
	FV6			1.93	(49.0)
	MV6				
	TW6			1.325	(33.7)
H	FV4	1.25 dia. *)	(ø31.8)	1.45	(36.8)
	MV4				
	TW4			1.08	(27.4)
	FV6			1.93	(49.0)
	MV6				
	TW6			1.325	(33.7)

*) Hastelloy valve body is round not square.

Made to Order

Made to Order

Products such as three port dual valves can be made with monoblock configurations. Please contact SMC for details.

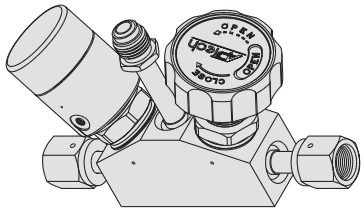

Elgiloy® is a registered trademark of Elgiloy Specialty Metals.
Hastelloy® is a registered trademark of Haynes International.
Vespel® is a registered trademark of DuPont.

Diaphragm Valve for Ultra High Purity

Air operated type (For low pressure)

Series AP4500

- **Suitable for UHP gas supply line**
- **Body material: 316L SS secondary remelt**
- **Pneumatically actuated normally closed or normally open**
- **LOTO option available as an option (AP4540)**
- **Indicator switch available as an option (AP4550)**

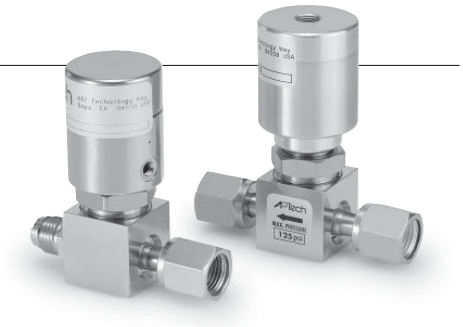

How to Order

AP 4 540 S □ 2PW FV6 FV6 □ □ □

(Inlet) (Outlet)

Size

Code	Cv
4	0.5

Model

Code	Status	Maximum operating pressure
540	Normally closed (N.C.)	125 psig (0.9 MPa)
550		250 psig (1.7 MPa)
580	Normally open (N.O.)	

Material

Code	Body material
S	316L SS secondary remelt
H	Hastelloy® C-22

Surface finish

Code	Surface finish Ra max
No code	15 µin. (0.4 µm) Standard
M	10 µin. (0.25 µm)
V	7 µin. (0.18 µm)
X	5 µin. (0.13 µm)

Ports

Code	Ports
2PW	2 ports

Optional portings and porting configurations available. Please refer to P.125.

Connections (Inlet, Outlet)

Code	Connections
FV4	1/4 inch face seal (Female)
MV4	1/4 inch face seal (Male)
TW4	1/4 inch tube weld
FV6	3/8 inch face seal (Female)
MV6	3/8 inch face seal (Male)
TW6	3/8 inch tube weld

Face to face dimension *1)

Code	Dimension
No code	2.12 inch (53.8 mm) Standard
1.75	1.75 inch (44.5 mm)

*1) Only applies to S material with TW4 connections.

Seat material

Code	Material
No code	PCTFE (Standard)
VS	Vespel® *2)

*2) Not available with H material.

Option (AP4550 only)

Code	Specification
No code	—
ISC	N.C. indicator switch *3)
ISO	N.O. indicator switch *4)

*3) Indication of closed status.
*4) Indication of opened status.

Specifications

Operating Parameters		AP4540	AP4550	AP4580
Status		Normally closed (N.C.)		Normally open (N.O.)
Gas		Select compatible materials of construction for the gas		
Operating pressure		Vacuum to 125 psig (0.9 MPa)	Vacuum to 250 psig (1.7 MPa)	
Proof pressure		1000 psig (6.9 MPa)		
Burst pressure		8000 psig (55.2 MPa)		
Ambient and operating temperature		-10 to 71 °C (No freezing) *1)		
Cv		0.5		
Leak rate	**Inboard leakage**	2×10^{-11} Pa·m³/sec		
	Outboard leakage	2×10^{-10} Pa·m³/sec *2)		
Across the seat leak		4×10^{-9} Pa·m³/sec *2)		
Surface finish		Ra max 15 µin. (0.4 µm)	Option: 10 µin. (0.25 µm), 7µin. (0.18 µm), 5 µin. (0.13 µm)	
Connections		Face seal, Tube weld		
Actuation pressure		70 to 110 psig (0.48 to 0.76 MPa)		
Actuation port connection		NPT 1/8 inch	10-32 UNF thread	NPT 1/8 inch
Actuation port location		Top	Side	Top
Installation		Bottom mount		
Internal volume		0.06 in³ (1.07 cm³)		
Mass		0.68 kg *3)	0.82 kg *3)	0.68 kg *3)
LOTO (Lockout)		Option (Part number: AP PL 210) *4)	N/A	

*1) High temperature available. Please contact SMC.
*2) Tested with Helium gas inlet pressure 125 psig (0.9 MPa).
*3) Mass, including individual boxed weight, may vary depending on connections or options.
*4) Refer to the specification for options. (P.124)

Wetted Parts Material

Wetted Parts	S	H
Body	316L SS secondary remelt	Hastelloy® C-22
Surface finish	Electropolish + Passivation	Electropolish
Diaphragm	Elgiloy®	
Seat	PCTFE (Option: Vespel®)	PCTFE

Dimensions

inch (mm)

AP4500

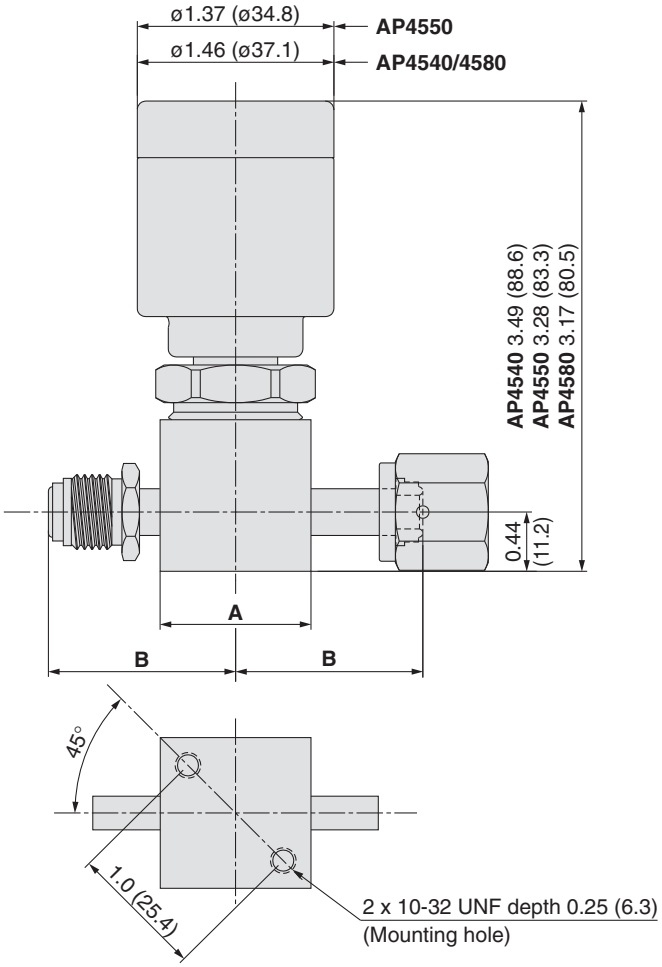

Bottom view

Material	Connections	A		B	
		inch	(mm)	inch	(mm)
S	FV4	1.12 sq.	(□28.4)	1.39	(35.3)
	MV4				
	TW4			1.06	(26.9)
	FV6			1.93	(49.0)
	MV6				
	TW6			1.325	(33.7)
H	FV4	1.25 dia. *)	(ø31.8)	1.45	(36.8)
	MV4				
	TW4			1.08	(27.4)
	FV6			1.93	(49.0)
	MV6				
	TW6			1.325	(33.7)

*) Hastelloy valve body is round not square.

Made to Order

Made to Order

Products such as three port dual valves can be made with monoblock configuration. Please contact SMC for details.

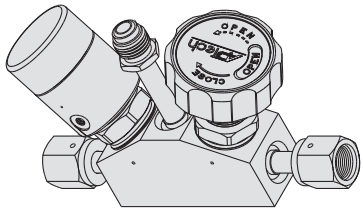

Elgiloy® is a registered trademark of Elgiloy Specialty Metals.
Hastelloy® is a registered trademark of Haynes International.
Vespel® is a registered trademark of DuPont.

Diaphragm Valve for Ultra High Purity

Air operated type (For high pressure)

Series AP3000

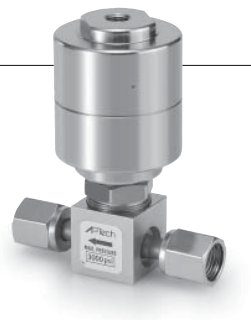

- **Suitable for UHP gas supply line**
- **Body material: 316L SS secondary remelt**
- **Pneumatically actuated normally closed**
- **High pressure type: Max. 3000 psig (20.7 MPa)**
- **LOTO option available as an option**
- **Indicator switch available as an option**

How to Order

AP30 00 S □ 2PW FV4 FV4 □ □ □

(Inlet) (Outlet)

Model

Code	Cv
00	0.23
02	0.28

Material

Code	Body material
S	316L SS secondary remelt
H	Hastelloy® C-22

Surface finish

Code	Surface finish Ra max
No code	15 µin. (0.4 µm) Standard
M	10 µin. (0.25 µm)
V	7 µin. (0.18 µm)
X	5 µin. (0.13 µm)

Ports

Code	Ports
2PW	2 ports

Optional portings and porting configurations available. Please refer to P.125.

Connections (Inlet, Outlet)

Code	Connections
FV4	1/4 inch face seal (Female)
MV4	1/4 inch face seal (Male)
TW4	1/4 inch tube weld
FV6	3/8 inch face seal (Female)
MV6	3/8 inch face seal (Male)
TW6	3/8 inch tube weld

Face to face dimension *1)

Code	Dimension
No code	2.12 inch (53.8 mm) Standard
1.75	1.75 inch (44.5 mm)

*1) Only applies to S material with TW4 connections.

Seat material

Code	Material
No code	PCTFE (Standard)
VS	Vespel® *2)

*2) Not available with H material.

Option

Code	Specification
No code	—
IS	Indicator switch *3)

*3) Indication of opened/closed status.

Specifications

Operating Parameters		AP3000	AP3002
Status		Normally closed (N.C.)	
Gas		Select compatible materials of construction for the gas	
Operating pressure		Vacuum to 3000 psig (20.7 MPa)	
Proof pressure		4000 psig (27.6 MPa)	
Burst pressure		8000 psig (55.2 MPa)	
Ambient and operating temperature		-10 to 71 °C (No freezing)	
Cv		0.23	0.28
Leak rate	**Inboard leakage**	2×10^{-11} Pa·m³/sec	
	Outboard leakage	2×10^{-10} Pa·m³/sec *1)	
Across the seat leak		4×10^{-9} Pa·m³/sec *1)	
Surface finish		Ra max 15 µin. (0.4 µm) Option: 10 µin. (0.25 µm), 7 µin. (0.18 µm), 5 µin. (0.13 µm)	
Connections		Face seal, Tube weld	
Actuation pressure		70 to 110 psig (0.48 to 0.76 MPa)	
Actuation port connection		NPT 1/8 inch	
Actuation port location		Top	
Installation		Bottom mount	
Internal volume		0.06 in³ (1.07 cm³)	
Mass		1.27 kg *2)	
LOTO (Lockout)		Option (Part number: AP PL 210) *3)	

*1) Tested with Helium gas inlet pressure 1000 psig (6.9 MPa).
*2) Mass, including individual boxed weight, may vary depending on connections or options.
*3) Refer to the specification for options. (P.124)

Wetted Parts Material

Wetted Parts	S	H
Body	316L SS secondary remelt	Hastelloy® C-22
Surface finish	Electropolish + Passivation	Electropolish
Diaphragm	Elgiloy®	
Seat	PCTFE (Option: Vespel®)	PCTFE

Dimensions

inch (mm)

AP3000

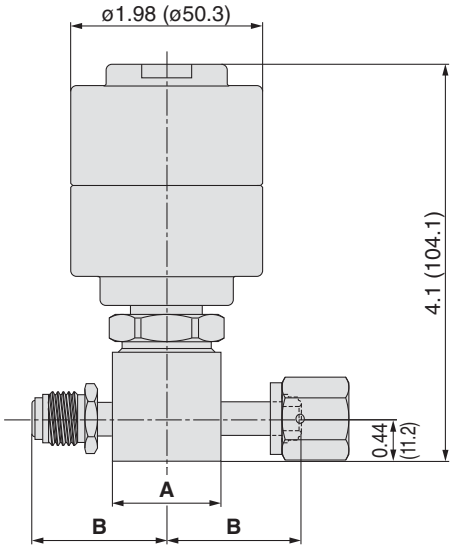

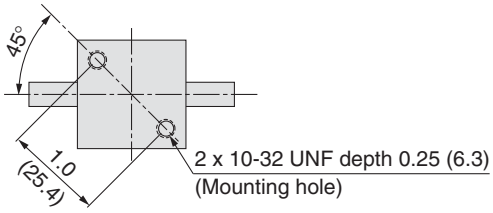

Material	Connections	A		B	
		inch	(mm)	inch	(mm)
S	FV4	1.12 sq.	(□28.4)	1.39	(35.3)
	MV4				
	TW4			1.06	(26.9)
	FV6			1.93	(49.0)
	MV6				
	TW6			1.325	(33.7)
H	FV4	1.25 dia. *)	(ø31.8)	1.45	(36.8)
	MV4				
	TW4			1.08	(27.4)
	FV6			1.93	(49.0)
	MV6				
	TW6			1.325	(33.7)

*) Hastelloy valve body is round not square.

Made to Order

Products such as three port dual valves can be made with monoblock configurations. Please contact SMC for details.

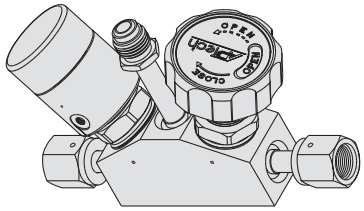

Elgiloy® is a registered trademark of Elgiloy Specialty Metals.
Hastelloy® is a registered trademark of Haynes International.
Vespel® is a registered trademark of DuPont.

Diaphragm Valve for Ultra High Purity

Air operated type
(For high pressure and high flow)

Series AP3130 & 3113

- Suitable for UHP gas supply line
- Body material: 316L SS secondary remelt
- Pneumatically actuated normally closed
- High pressure type: 20.7 MPa and 9 MPa
- Designed for bulk specialty gas (BSGS) delivery
- LOTO option available as an option

How to Order

AP31 30 S □ 2PW MV8 MV8 □ □

(Inlet) (Outlet)

Model

Code	Maximum operating pressure	Cv
13	1300 psig (9.0 MPa)	1.0
30	3000 psig (20.7 MPa) *1)	0.7

*1) 2400 psig (16.5MPa) for connection size 3/4 inch.

Material

Code	Body material
S	316L SS secondary remelt
H	Hastelloy® C-22 *2)

*2) Special export controls apply to Hastelloy body with 1/2 inch or greater size connection.

Surface finish

Code	Surface finish Ra max
No code	15 µin. (0.4 µm) Standard
M	10 µin. (0.25 µm)

Ports

Code	Ports
2PW	2 ports

Connections (Inlet, Outlet)

Code	Connections
FV4	1/4 inch face seal (Female)
MV4	1/4 inch face seal (Male)
TW6	3/8 inch tube weld
FV8	1/2 inch face seal (Female)
MV8	1/2 inch face seal (Male)
TW8	1/2 inch tube weld
FV12	3/4 inch face seal (Female)
MV12	3/4 inch face seal (Male)
TW12	3/4 inch tube weld

Option

Code	Specification
No code	—
IS	Indicator switch *4)

*4) Indication of opened/closed status.

Seat material

Code	Material
No code	PCTFE (Standard)
VS	Vespel® *3)

*3) Not available with H material.

Specifications

Operating Parameters		AP3113	AP3130
Status		Normally closed (N.C.)	
Gas		Select compatible materials of construction for the gas	
Operating pressure		Vacuum to 1300 psig (9.0 MPa)	Vacuum to 3000 psig (20.7 MPa) *1)
Proof pressure		4500 psig (31 MPa)	
Burst pressure		10000 psig (69 MPa)	
Ambient and operating temperature		-10 to 65°C (No freezing)	
Cv *2)		1.0	0.7
Leak rate	**Inboard leakage**	2×10^{-11} Pa·m³/sec	
	Outboard leakage	2×10^{-10} Pa·m³/sec *3)	
Across the seat leak		4×10^{-9} Pa·m³/sec *3)	
Surface finish		Ra max 15 µin. (0.4 µm) Option: 10 µin. (0.25 µm)	
Connections		Face seal, Tube weld	
Actuation pressure		70 to 110 psig (0.48 to 0.76 MPa)	
Actuation port connection		NPT 1/8 inch	
Actuation port location		Top	
Installation		Bottom mount	
Internal volume		0.36 in³ (6.0 cm³) for body	
Mass		1.27 kg *4)	
LOTO (Lockout)		Option (Part number: AP PL 210) *5)	

*1) Maximum operating pressure 2400 psig (16.5 MPa) for connection size 3/4 inch.
*2) Figure of 1/2 inch connection.
*3) Tested with Helium gas inlet pressure 500 psig (3.5 MPa).
*4) Mass, including individual boxed weight, may vary depending on connections or options.
*5) Refer to the specification for options. (P.124)

Wetted Parts Material

Wetted Parts	S	H
Body	316L SS secondary remelt	Hastelloy® C-22
Surface finish	Electropolish + Passivation	Electropolish
Spring	316L SS	Inconel® 600
Diaphragm	Elgiloy®	
Poppet	316L SS	Hastelloy® C-22
Seat	PCTFE (Option: Vespel®)	PCTFE

Dimensions

inch (mm)

AP3130 & 3113

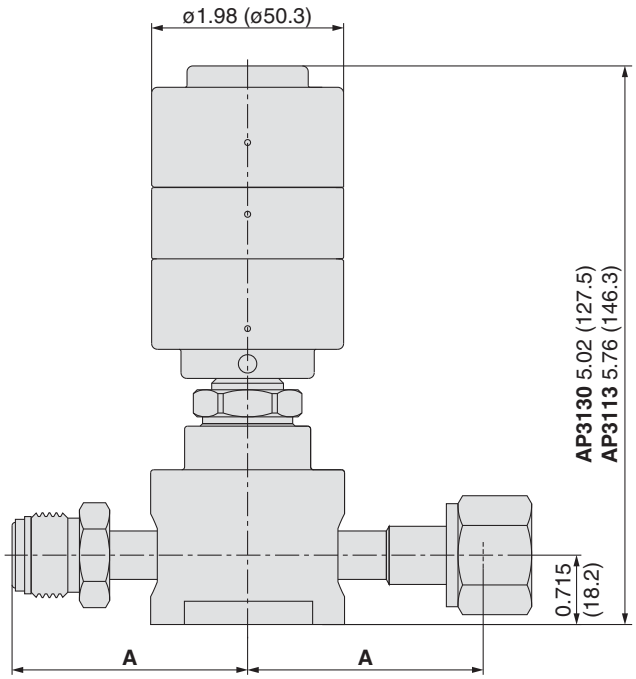

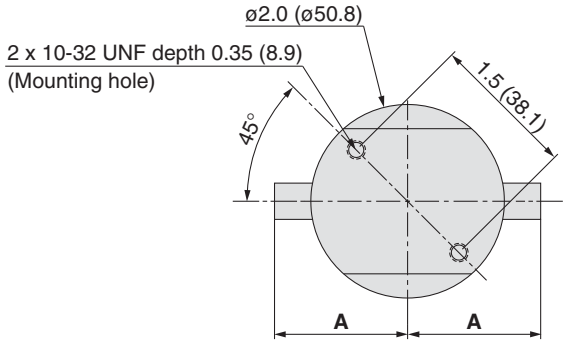

Bottom view

Connections	A	
	inch	(mm)
FV4	2.00	(50.8)
MV4		
TW6	1.375	(34.9)
FV8	2.425	(61.6)
MV8		
TW8	1.79	(45.4)
FV12	3.50	(88.9)
MV12		
TW12	3.25	(82.6)

Elgiloy® is a registered trademark of Elgiloy Specialty Metals.
Hastelloy® is a registered trademark of Haynes International.
Inconel® is a registered trademark of Special Metal.
Vespel® is a registered trademark of DuPont.

Diaphragm Valve for Ultra High Purity

Air operated type (For high flow)

Series AP3700

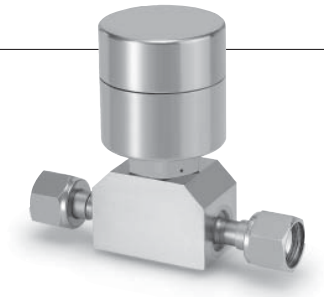

- **Suitable for UHP gas supply line**
- **Body material: 316L SS secondary remelt**
- **Pneumatically actuated normally closed or normally open**
- **Purge ports and monoblock configurations available**

How to Order

AP37 00 S ☐ MV8 MV8 00 ☐ ☐ ☐

(Inlet) (Outlet)

Model

Code	Status
00	Normally closed (N.C.)
08	Normally open (N.O.)

Material

Code	Body material
S	316L SS secondary remelt

Surface finish

Code	Surface finish Ra max
No code	15 µin. (0.4µm) Standard
M	10 µin. (0.25 µm)
V	7 µin. (0.18 µm)
X	5 µin. (0.13 µm)

Porting Configuration

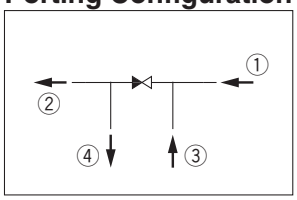

Connections (Inlet①, Outlet②)

Code	Connections
TW6	3/8 inch tube weld
FV8	1/2 inch face seal (Female)
MV8	1/2 inch face seal (Male)
TW8	1/2 inch tube weld
FV12	3/4 inch face seal (Female)
MV12	3/4 inch face seal (Male)
TW12	3/4 inch tube weld

Purge port *1)

Code	Inlet③	Outlet④
00	None	None
M0	Available	None
0B	None	Available
MB	Available	Available

*1) 1/4 inch face seal (Male) as standard.

Seat material

Code	Material
No code	PCTFE (Standard)
VS	Vespel®

Purge port option

Code	Specification
No code	—
C	Capped purge port

Option (AP3700 Only)

Code	Specification
No code	—
ISC	N.C. indicator switch *2)
ISO	N.O. indicator switch *3)

*2) Indication of closed status.
*3) Indication of opened status.

Specifications

Operating Parameters		AP3700	AP3708
Status		Normally closed (N.C.)	Normally open (N.O.)
Gas		Select compatible materials of construction for the gas	
Operating pressure		Vacuum to 250 psig (1.7 MPa)	
Proof pressure		500 psig (3.4 MPa)	
Burst pressure		1000 psig (6.9 MPa)	
Ambient and operating temperature		-10 to 71 °C (No freezing)	
Cv		2.8	
Leak rate	**Inboard leakage**	2×10^{-11} Pa·m³/sec	
	Outboard leakage	2×10^{-10} Pa·m³/sec *1)	
Across the seat leak		4×10^{-9} Pa·m³/sec *1)	
Surface finish		Ra max 15 µin. (0.4 µm) Option: 10µin.(0.25 µm), 7µin.(0.18 µm), 5µin.(0.13 µm)	
Connections		Face seal, Tube weld	
Actuation pressure		80 to 100 psig (0.55 to 0.7 MPa)	
Actuation port connection		10-32 UNF thread	
Actuation port location		Side	
Installation		Bottom mount	
Internal volume		0.76 in³ (12.52 cm³)	
Mass		1.54 kg *2)	

*1) Tested with Helium gas inlet pressure 125 psig (0.9 MPa).
*2) Mass, including individual boxed weight, may vary depending on connections or options.

Wetted Parts Material

Wetted Parts	S
Body	316L SS secondary remelt
Surface finish	Electropolish + Passivation
Diaphragm	316L SS
Seat	PCTFE (Option: Vespel®)

Dimensions

inch (mm)

AP3700

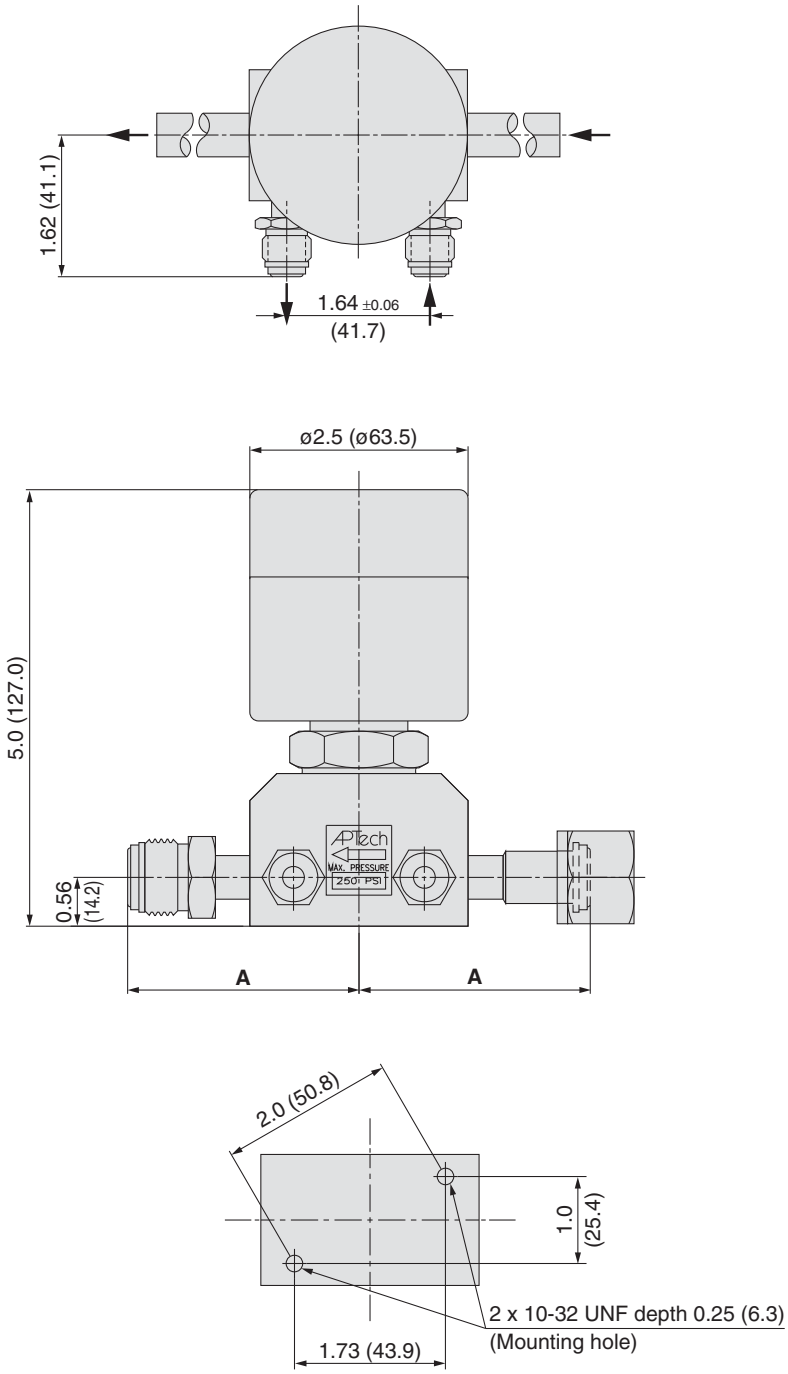

Connections	A	
	inch	(mm)
TW6	4.25	(108.0)
FV8	2.65	(67.3)
MV8		
TW8	4.25	(108.0)
FV12	3.20	(81.3)
MV12		
TW12	4.25	(108.0)

Made to Order

Change of porting configuration and products such as three port dual valves can be made. Please contact SMC for details.

Vespel® is a registered trademark of DuPont.

Diaphragm Valve for Ultra High Purity

Air operated type Two Step

Series AP3571 & 4571

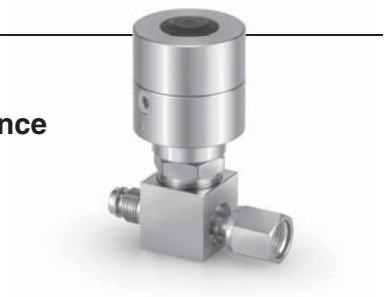

- **Two step mode - metered flow and full open**
- **Two separate actuation ports**
- **Soft start valve to minimize vacuum chamber pressurization turbulence**
- **Metered flow adjustable AP3571: 10 to 200 slpm***
  AP4571: 10 to 350 slpm*
- **Pneumatically actuated normally closed**
- **Body material: 316L SS secondary remelt**

* At 80 psig (0.55 MPa) of N_2

How to Order

AP	3	571	S		2PW	FV4 (Inlet)	FV4 (Outlet)		M	050

Size

Code	Cv
3	0.29
4	0.5

Model

Code	Mode	Status
571	Two step mode	Normally closed (N.C.)

Material

Code	Body material
S	316L SS secondary remelt

Surface finish

Code	Surface finish Ra max
No code	15 µin. (0.4 µm) Standard
M	10 µin. (0.25 µm)
V	7 µin. (0.18 µm)
X	5 µin. (0.13 µm)

Ports

Code	Ports
2PW	2 ports

Optional portings and porting configurations available. Please refer to P.125.

Connections (Inlet, Outlet)

Code	Connections
FV4	1/4 inch face seal (Female)
MV4	1/4 inch face seal (Male)
TW4	1/4 inch tube weld *1)
FV6	3/8 inch face seal (Female)
MV6	3/8 inch face seal (Male)
TW6	3/8 inch tube weld

*1) TW4 is not available with AP4571

Face to face dimension *2)

Code	Face to face
No code	2.12 inch (53.8 mm) Standard
1.75	1.75 inch (44.5 mm)

*2) Only applies to S material with TW4 connections.

Metered flow

Code	Metered adjusted flow in slpm
XXX (3 digits)	Metered adjusted flow in slpm at 80 psig (0.55 MPa) N_2. Replace XXX with flow rate using 3 digits, example 50 slpm = "050" Adjustable Range: AP3571= 10 to 200 slpm, AP4571= 10 to 350 slpm

Specifications

Operating Parameters		AP3571	AP4571
Status		Normally closed (N.C.)	
Gas		Select compatible materials of contruction of the gas	
Operating pressure		Vacuum to 125 psig (0.9 MPa)	
Proof pressure		200 psig (1.4 MPa)	
Burst pressure		1000 psig (6.9 MPa)	
Ambient and operating temperature		0 to 51 °C (No freezing)	
Cv		0.29	0.5
Leak rate	**Inboard leakage**	$2x10^{-11}$ Pa·m³/sec	
	Outboard leakage	$2x10^{-10}$ Pa·m³/sec *1)	
Across the seat leak		$4x10^{-9}$ Pa·m³/sec *1)	
Surface finish		Ra max 15 µin. (0.4 µm) Option: 10 µin. (0.25 µm), 7 µin. (0.18 µm), 5 µin. (0.13 µm)	
Connections		Face seal, Tube weld	
Actuation pressure		70 to 110 psig (0.48 to 0.76 MPa)	
Actuation port connection		M5 thread (2 each)	
Actuation port location		Sides (2 each)	
Installation		Bottom mount	
Internal volume		0.06 in³ (1.07 cm³)	
Adjustable range of metered flow *2)		10 to 200 slpm	10 to 350 slpm
Tolerance of metered flow	**10 to 20 slpm**	±6 slpm	
	21 to 50 slpm	±10 slpm	
	51 to 100 slpm	±15 slpm	
	101 to 200 slpm	±20 slpm	
	201 to 350 slpm	N/A	±25 slpm

*1) Tested with Helium gas inlet pressure 125 psig (0.9 MPa)
*2) At 80 psig (0.55 MPa) N_2

Wetted Parts Material

Wetted parts	S
Body	316L SS secondary remelt
Surface finish	Electropolish + Passivation
Diaphragm	Elgiloy®
Seat	PCTFE

Dimensions

inch (mm)

AP3571 & 4571

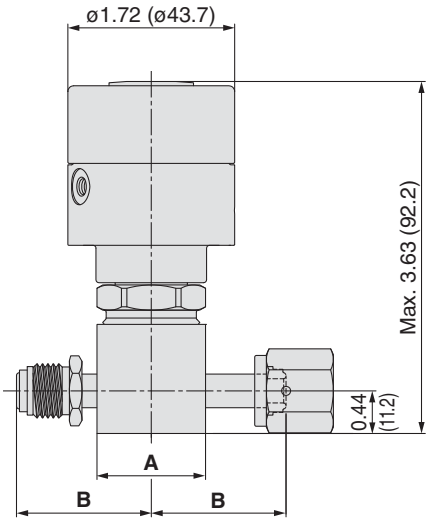

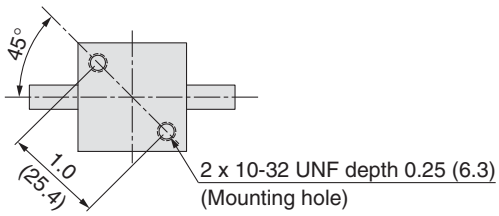

Material	Connections	A		B	
		inch	(mm)	inch	(mm)
S	FV4	1.12 sq.	(□28.4)	1.39	(35.3)
	MV4				
	TW4			1.06	(26.9)
	FV6			1.93	(49.0)
	MV6				
	TW6			1.325	(33.7)

Elgiloy® is a registered trademark of Elgiloy Specialty Metals.

Diaphragm Valve for Ultra High Purity

Air operated type (Metal seated)

Series AP3200

- Suitable for UHP gas supply line
- Body material: 316L SS secondary remelt
- All metal wetted parts
- Pneumatically actuated normally closed
- Indicator switch available as an option

How to Order

AP32 00 S □ 2PW MV4 MV4 □ □

(Inlet) (Outlet)

Air operated

Material

Code	Body material
S	316L SS secondary remelt

Surface finish

Code	Surface finish Ra max
No code	15 µin. (0.4 µm) Standard
M	10 µin. (0.25 µm)
V	7 µin. (0.18 µm)
X	5 µin. (0.13 µm)

Ports

Code	Ports
2PW	2 ports

Optional portings and porting configurations available. Please refer to P.125.

Connections (Inlet, Outlet)

Code	Connections
FV4	1/4 inch face seal (Female)
MV4	1/4 inch face seal (Male)
TW4	1/4 inch tube weld
FV6	3/8 inch face seal (Female)
MV6	3/8 inch face seal (Male)
TW6	3/8 inch tube weld

Face to face dimension *1)

Code	Dimension
No code	2.12 inch (53.8 mm) Standard
1.75	1.75 inch (44.5 mm)

*1) Only applies to TW4 connections.

Option

Code	Specification
No code	—
IS	Indicator switch *2)

*2) Indication of opened/closed status

Specifications

Operating Parameters		AP3200
Status		Normally closed (N.C.)
Gas		Select compatible materials of construction for the gas
Operating pressure		Vacuum to 125 psig (0.9 MPa)
Proof pressure		1000 psig (6.9 MPa)
Burst pressure		8000 psig (55.2 MPa)
Ambient and operating temperature		-10 to 100 °C (No freezing)
Cv		0.27
Leak rate	**Inboard leakage**	2×10^{-11} Pa·m³/sec
	Outboard leakage	2×10^{-10} Pa·m³/sec *1)
Across the seat leak		1×10^{-7} Pa·m³/sec *1)
Surface finish		Ra max 15 µin. (0.4 µm) Option: 10 µin. (0.25 µm), 7 µin. (0.18 µm), 5 µin. (0.13 µm)
Connections		Face seal, Tube weld
Actuation pressure		70 to 110 psig (0.48 to 0.76 MPa)
Actuation port connection		NPT 1/8 inch
Actuation port location		Top
Installation		Bottom mount
Internal volume		0.06 in³ (1.07 cm³)
Mass		1.27 kg *2)

*1) Tested with Helium gas inlet pressure 125 psig (0.9 MPa).
*2) Mass, including individual boxed weight, may vary depending on connections or options.

Wetted Parts Material

Wetted Parts	S
Body	316L SS secondary remelt
Surface finish	Electropolish + Passivation
Diaphragm	Elgiloy®

Dimensions

inch (mm)

AP3200

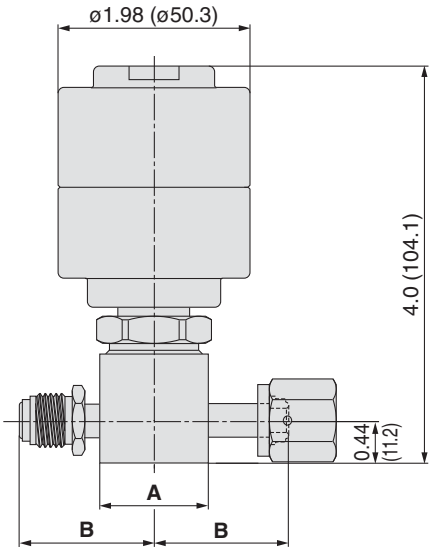

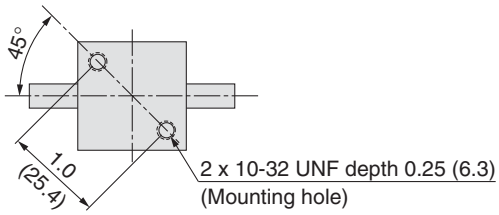

Material	Connections	A		B	
		inch	(mm)	inch	(mm)
S	FV4	1.12 sq.	(□28.4)	1.39	(35.3)
	MV4				
	TW4			1.06	(26.9)
	FV6			1.93	(49.0)
	MV6				
	TW6			1.325	(33.7)

Elgiloy® is a registered trademark of Elgiloy Specialty Metals.

Diaphragm Valve for Ultra High Purity

Manually operated type

Series AP3600

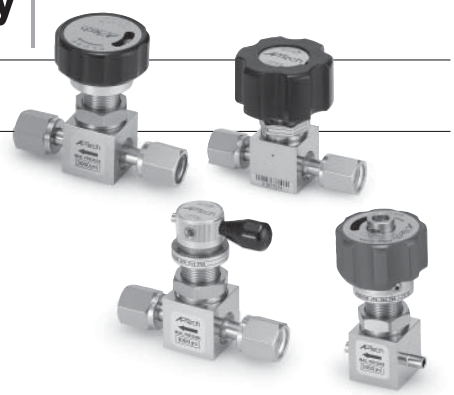

- **Suitable for UHP gas supply line**
- **Body material: 316L SS secondary remelt**
- **LOTO standard with AP3657, optional AP3625**
- **Indicator switch available as an option (AP3650)**

How to Order

AP 3 650 S 2PW FV4 FV4

(Inlet) (Outlet)

Size

Code	Cv
3	0.29

Model

Code	Knob
600	Multi turn round knob
625	1/4 turn lever knob
650	1/4 turn round knob with open/close indication window
657	Pull twist knob with LOTO

Material

Code	Body material
S	316L SS secondary remelt
H	Hastelloy® C-22

Surface finish

Code	Surface finish Ra max
No code	15 µin. (0.4 µm) Standard
M	10 µin. (0.25 µm)
V	7 µin. (0.18 µm)
X	5 µin. (0.13 µm)

Ports

Code	Ports
2PW	2 ports

Optional portings and porting configurations available.
Please refer to P.125.

Connections (Inlet, Outlet)

Code	Connections
FV4	1/4 inch face seal (Female)
MV4	1/4 inch face seal (Male)
TW4	1/4 inch tube weld
FV6	3/8 inch face seal (Female)
MV6	3/8 inch face seal (Male)
TW6	3/8 inch tube weld

Face to face dimension *1)

Code	Dimension
No code	2.12 inch (53.8 mm) Standard
1.75	1.75 inch (44.5 mm)

*1) Only applies to S material with TW4 connections.

Seat material

Code	Material
No code	PCTFE (Standard)
VS	Vespel® *2)

*2) Not available with H material.

Installation option

Code	Installation
No code	Bottom mount (Standard)
P	Panel Installation *3)

*3) Panel mounting hole: dia.0.78 inch (19.8 mm).

Option (AP3650 only)

Code	Specification
No code	—
ISH	Indicator switch *4)

*4) Indication of opened/closed status.

Specifications

Operating Parameters		AP3600	AP3625	AP3650	AP3657
Gas		Select compatible materials of construction for the gas			
Operating pressure		Vacuum to 3000 psig (20.7 MPa)			
Proof pressure		4000 psig (27.6 MPa)			
Burst pressure		8000 psig (55.2 MPa)			
Ambient and operating temperature		-40 to 71 °C (No freezing) *1)			
Cv		0.29			
Leak rate	**Inboard leakage**	2×10^{-11} Pa·m³/sec			
	Outboard leakage	2×10^{-10} Pa·m³/sec *2)			
Across the seat leak		4×10^{-9} Pa·m³/sec *2)			
Surface finish		Ra max 15 µin. (0.4 µm) Option: 10 µin. (0.25 µm), 7 µin. (0.18 µm), 5 µin. (0.13 µm)			
Connections		Face seal, Tube weld			
Installation		Bottom mount (Option: panel mount)			
Internal volume		0.06 in³ (1.07 cm³)			
Mass		0.36 kg *3)	0.45 kg *3)	0.73 kg *3)	0.4 kg *3)
Knob		Multi turn round knob	1/4 turn lever knob *4)	1/4 turn round knob with open/close indication window	Pull twist knob with LOTO *5)
Operational Safety Device (OSD)		N/A	Option (Part number: AP PL227) *6)	N/A	Standard
LOTO (Lockout)			Option (Part number: AP PL225) *6)		

*1) -10 to 90 °C for Vespel® seat. High temperature available. Please contact SMC.
*2) Tested with Helium gas inlet pressure 250 psig (1.7 MPa).
*3) Mass, including individual boxed weight, may vary depending on connections or options.
*4) Optional lever color available. Please contact SMC.
*5) Handle must be pulled to turn open from closed.
*6) Refer to the specification for options. (P.124)

Wetted Parts Material

Wetted Parts	S	H
Body	316L SS secondary remelt	Hastelloy® C-22
Surface finish	Electropolish + Passivation	Electropolish
Diaphragm	Elgiloy®	
Seat	PCTFE (Option: Vespel®)	PCTFE

Dimensions

inch (mm)

AP3600

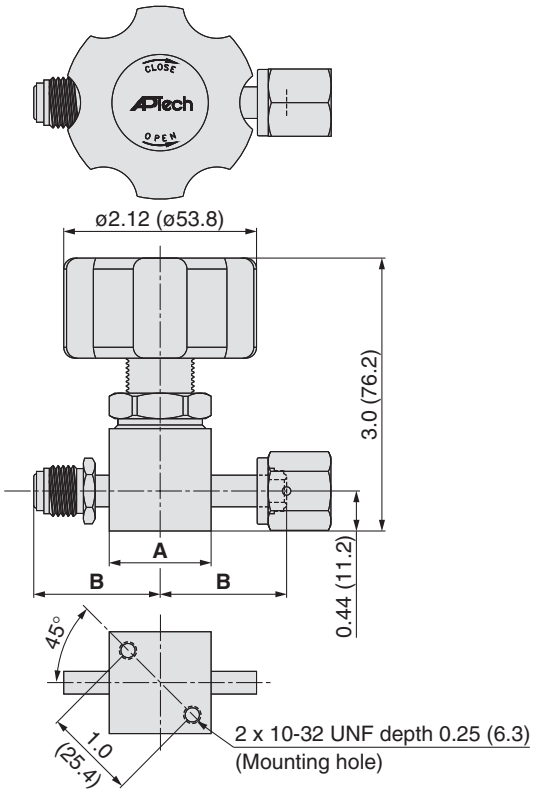

AP3625

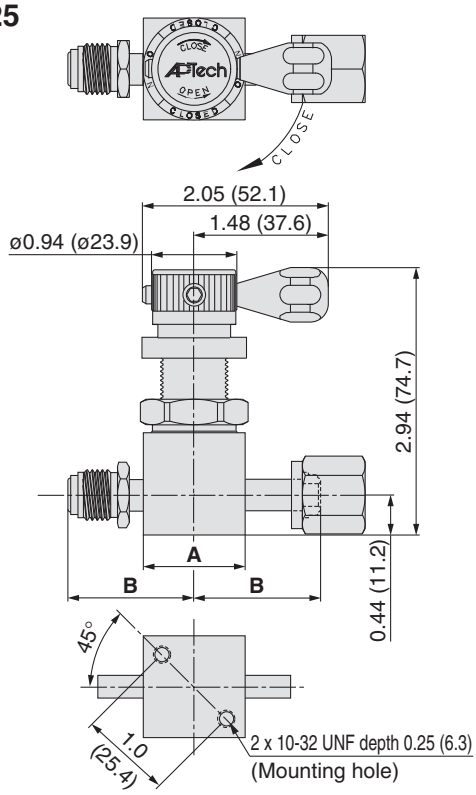

AP3650

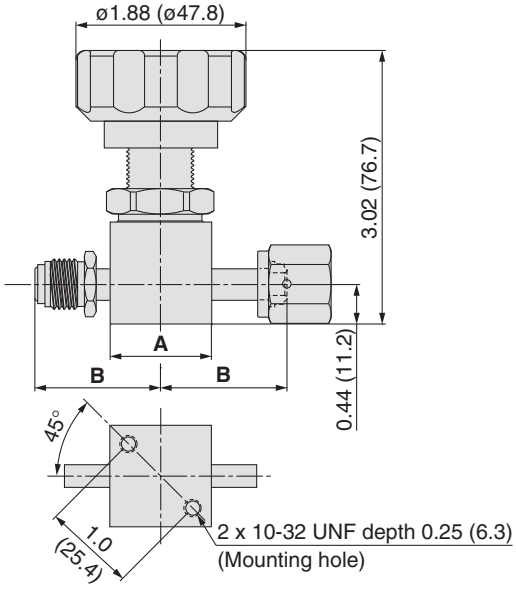

AP3657

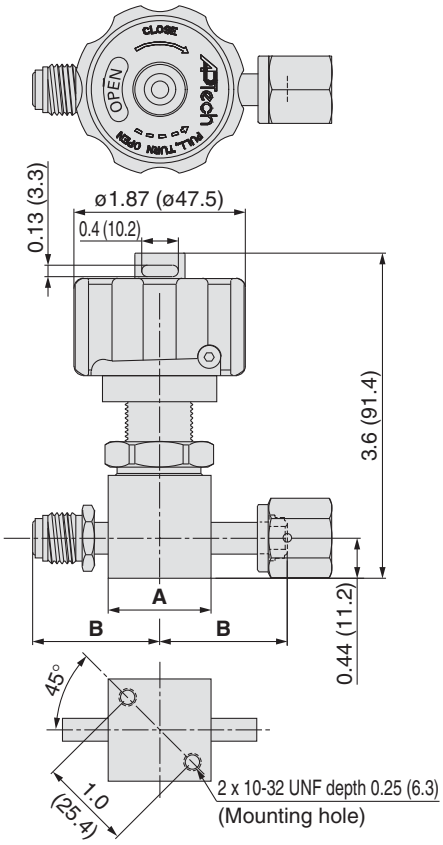

Material	Connections	A		B	
		inch	(mm)	inch	(mm)
S	FV4	1.12 sq.	(□28.4)	1.39	(35.3)
	MV4				
	TW4			1.06	(26.9)
	FV6			1.93	(49.0)
	MV6				
	TW6			1.325	(33.7)
H	FV4	1.25 dia.*)	(ø31.8)	1.45	(36.8)
	MV4				
	TW4			1.08	(27.4)
	FV6			1.93	(49.0)
	MV6				
	TW6			1.325	(33.7)

*) Hastelloy valve body is round not square.

Made to Order

Products such as three port dual valves can be made with monoblock configurations. Please contact SMC for details.

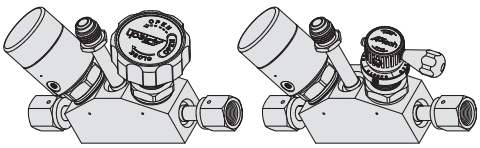

Diaphragm Valve for Ultra High Purity

Manually operated type

Series AP4600

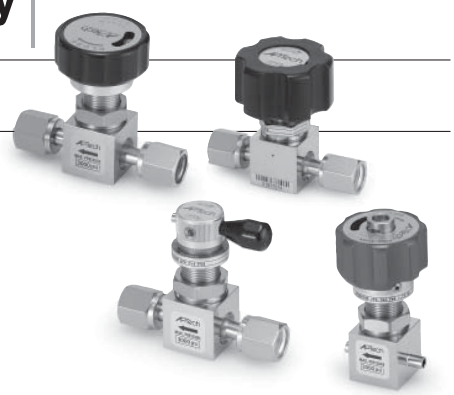

- Suitable for UHP gas supply line
- Body material: 316L SS secondary remelt
- LOTO standard with AP4657, optional AP4625
- Indicator switch available as an option (AP4650)

How to Order

AP 4 650 S □ 2PW FV6 FV6 □ □ □ □

(Inlet) (Outlet)

Size

Code	Cv
4	0.5

Model

Code	Knob
600	Multi turn round knob
625	1/4 turn lever knob
650	1/4 turn round knob with open/close indication window
657	Pull twist knob with LOTO

Material

Code	Body material
S	316L SS secondary remelt
H	Hastelloy® C-22

Surface finish

Code	Surface finish Ra max
No code	15 µin. (0.4 µm) Standard
M	10 µin. (0.25 µm)
V	7 µin. (0.18 µm)
X	5 µin. (0.13 µm)

Ports

Code	Ports
2PW	2 ports

Optional portings and porting configurations available.
Please refer to P.125.

Connections (Inlet, Outlet)

Code	Connections
FV4	1/4 inch face seal (Female)
MV4	1/4 inch face seal (Male)
TW4	1/4 inch tube weld
FV6	3/8 inch face seal (Female)
MV6	3/8 inch face seal (Male)
TW6	3/8 inch tube weld

Face to face dimension *1)

Code	Dimension
No code	2.12 inch (53.8 mm) Standard
1.75	1.75 inch (44.5mm)

*1) Only applies to S material with TW4 connections.

Option (AP4650 only)

Code	Specification
No code	—
ISH	Indicator switch *4)

*4) Indication of opened/closed status.

Installation option

Code	Installation
No code	Bottom mount (Standard)
P	Panel Installation *3)

*3) Panel mounting hole: dia.0.78 inch (19.8 mm).

Seat material

Code	Material
No code	PCTFE (Standard)
VS	Vespel® *2)

*2) Not available with H material.

Specifications

Operating Parameters		AP4600	AP4625	AP4650	AP4657
Gas		Select compatible materials of construction for the gas			
Operating pressure		Vacuum to 250 psig (1.7 MPa)			
Proof pressure		1000 psig (6.9 MPa)			
Burst pressure		8000 psig (55.2 MPa)			
Ambient and operating temperature		-40 to 71 °C (No freezing) *1)			
Cv		0.5			
Leak rate	Inboard leakage	2×10^{-11} Pa·m³/sec			
	Outboard leakage	2×10^{-10} Pa·m³/sec *2)			
Across the seat leak		4×10^{-9} Pa·m³/sec *2)			
Surface finish		Ra max 15 µin. (0.4 µm) Option: 10 µin. (0.25 µm), 7 µin. (0.18 µm), 5 µin. (0.13 µm)			
Connections		Face seal, Tube weld			
Installation		Bottom mount (Option: panel mount)			
Internal volume		0.06 in³ (1.07 cm³)			
Mass		0.36 kg *3)	0.45 kg *3)	0.73 kg *3)	0.4 kg *3)
Knob		Multi turn round knob	1/4 turn lever knob *4)	1/4 turn round knob with open/close indication window	Pull twist knob with LOTO *5)
Operational Safety Device (OSD)		N/A	Option (Part number: AP PL227) *6)	N/A	Standard
LOTO (Lockout)			Option (Part number: AP PL225) *6)		

*1) -10 to 90 °C for Vespel® seat. High temperature available. Please contact SMC.
*2) Tested with Helium gas inlet pressure 250 psig (1.7 MPa).
*3) Mass, including individual boxed weight, may vary depending on connections or options.
*4) Optional lever color available. Please contact SMC.
*5) Handle must be pulled to turn open from closed.
*6) Refer to the specification for options. (P.124)

Wetted Parts Material

Wetted Parts	S	H
Body	316L SS secondary remelt	Hastelloy® C-22
Surface finish	Electropolish + Passivation	Electropolish
Diaphragm	Elgiloy®	
Seat	PCTFE(Option: Vespel®)	PCTFE

Dimensions

inch (mm)

AP4600

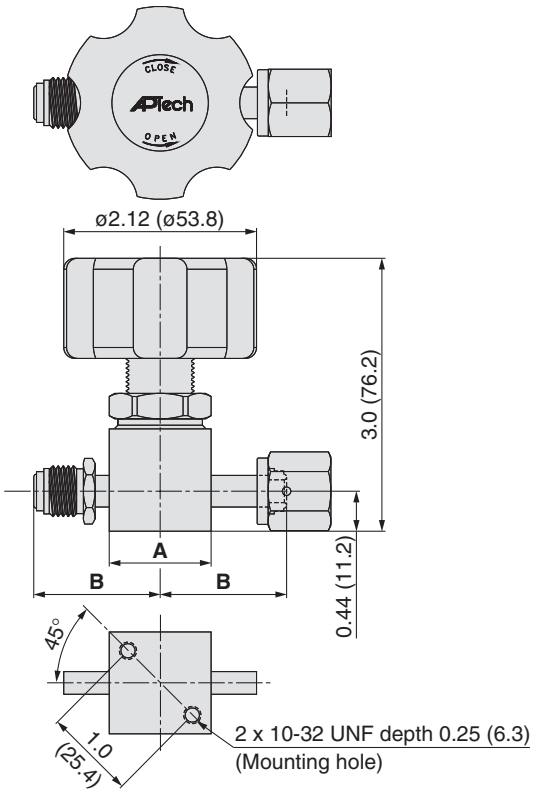

AP4625

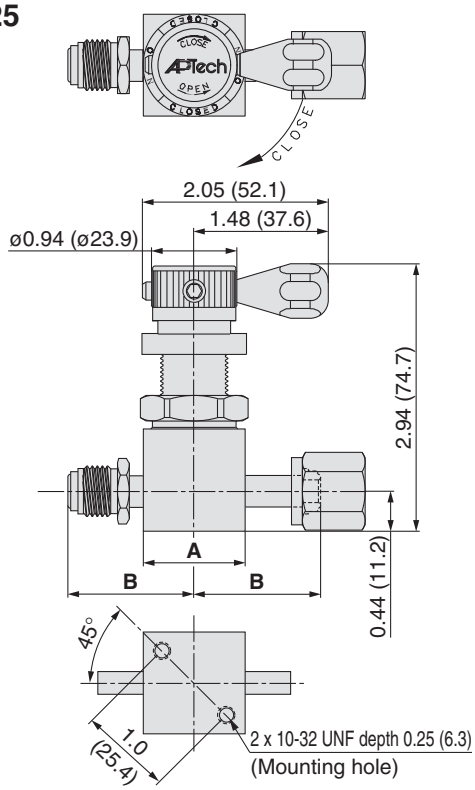

AP4650

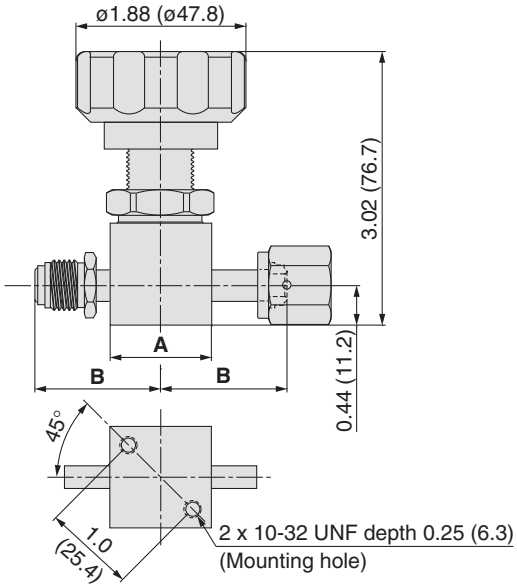

AP4657

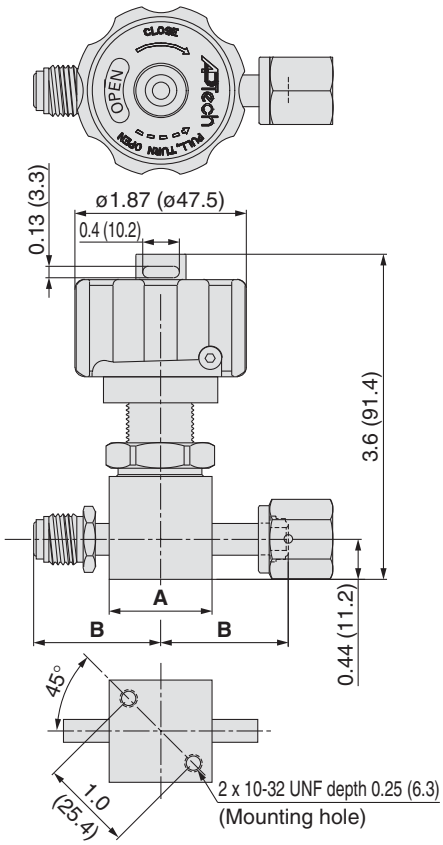

Material	Connections	A inch	A (mm)	B inch	B (mm)
S	FV4	1.12 sq.	(□28.4)	1.39	(35.3)
	MV4				
	TW4			1.06	(26.9)
	FV6			1.93	(49.0)
	MV6				
	TW6			1.325	(33.7)
H	FV4	*) 1.25 dia.	(ø31.8)	1.45	(36.8)
	MV4				
	TW4			1.08	(27.4)
	FV6			1.93	(49.0)
	MV6				
	TW6			1.325	(33.7)

*) Hastelloy valve body is round not square.

Made to Order

Made to Order

Products such as three port dual valves can be made with monoblock configurations. Please contact SMC for details.

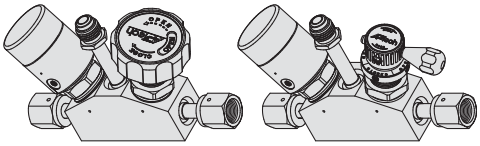

Diaphragm Valve for Ultra High Purity

Manually operated type
(For high pressure and high flow)

Series AP3100

- **Suitable for UHP gas supply line**
- **Body material: 316L SS secondary remelt**
- **High pressure type: 20.7 MPa and 9 MPa**
- **Designed for bulk specialty gas (BSGS) delivery**
- **LOTO standard with AP3157, optional AP3125**

How to Order

AP31 [00] [S] [ ] 2PW [MV8] [MV8] [ ] [ ]

(Inlet) (Outlet)

Model

Code	Maximum operating pressure	Cv	Knob
00	3000 psig (20.7 MPa) *1)	0.7	Multi turn round knob
02	1300 psig (9.0 MPa)	1.3	
25	3000 psig (20.7 MPa) *1)	1.0	1/4 turn lever knob
50	1300 psig (9.0 MPa)	1.0	1/4 turn round knob
57	1300 psig (9.0 MPa)	1.0	Pull twist knob with LOTO

*1) 2400 psig (16.5 MPa) for connection size 3/4 inch.

Material

Code	Body material
S	316L SS secondary remelt
H	Hastelloy® C-22 *2)

*2) Special export controls apply to Hastelloy body with 1/2 inch or greater size connection.

Surface finish

Code	Surface finish Ra max
No code	15 µin. (0.4 µm) Standard
M	10 µin. (0.25 µm)

Ports

Code	Ports
2PW	2 ports

Connections (Inlet, Outlet)

Code	Connections
FV4	1/4 inch face seal (Female)
MV4	1/4 inch face seal (Male)
TW6	3/8 inch tube weld
FV8	1/2 inch face seal (Female)
MV8	1/2 inch face seal (Male)
TW8	1/2 inch tube weld
FV12	3/4 inch face seal (Female)
MV12	3/4 inch face seal (Male)
TW12	3/4 inch tube weld

Option (AP3150 only)

Code	Specification
No code	—
ISH	Indicator switch Handle *4)

*4) Indication of opened/closed status.

Seat material

Code	Material
No code	PCTFE (Standard)
VS	Vespel® *3)

*3) Not available with H material.

Specifications

Operating Parameters		AP3100	AP3102	AP3125	AP3150	AP3157
Gas		Select compatible materials of construction for the gas				
Operating pressure		Vacuum to 3000 psig (20.7 MPa) *1)	Vacuum to 1300 psig (9.0 MPa)	Vacuum to 3000 psig (20.7 MPa) *1)	Vacuum to 1300 psig (9.0 MPa)	
Proof pressure		4500 psig (31 MPa)				
Burst pressure		10000 psig (69 MPa)				
Ambient and operating temperature		-40 to 65 °C (No freezing) *2)				
Cv *3)		0.7	1.3	1.0		
Leak rate	**Inboard leakage**	2×10^{-11} Pa·m³/sec				
	Outboard leakage	2×10^{-10} Pa·m³/sec *4)				
Across the seat leak		4×10^{-9} Pa·m³/sec *4)				
Surface finish		Ra max 15 µin. (0.4 µm) Option: 10 µin. (0.25 µm)				
Connections		Face seal , Tube weld				
Installation		Bottom mount				
Internal volume		0.36 in³ (6.0 cm³)				
Mass		1.27 kg *5)				
Knob		Multi turn round knob (1 1/2 turn)		1/4 turn lever knob *6)	1/4 turn round knob with open/close indication window *7)	Pull twist knob *8)
Operational Safety Device (OSD)		N/A		Option (Part number: AP PL227) *9)	N/A	Standard
LOTO (Lockout)				Option (Part number: AP PL225) *9)		

*1) Maximum operating pressure 2400 psig (16.5 MPa) for connection size 3/4 inch.
*2) -10 to 90 °C for Vespel® seat.
*3) Figure of 1/2 inch connection.
*4) Tested with Helium gas inlet pressure 500 psig (3.5 MPa).
*5) Mass, including individual boxed weight, may vary depending on connections or options.
*6) Optional lever color available. Please contact SMC.
*7) Optional indicator switch available. Please contact SMC.
*8) Handle must be pulled to turn open from closed.
*9) Refer to the specification for options. (P.124)

Wetted Parts Material

Wetted Parts	S	H
Body	316L SS secondary remelt	Hastelloy® C-22
Surface finish	Electropolish + Passivation	Electropolish
Spring	316L SS	Inconel® 600
Diaphragm	Elgiloy®	
Poppet	316L SS	Hastelloy® C-22
Seat	PCTFE (Option: Vespel®)	PCTFE

Dimensions

inch (mm)

AP3125

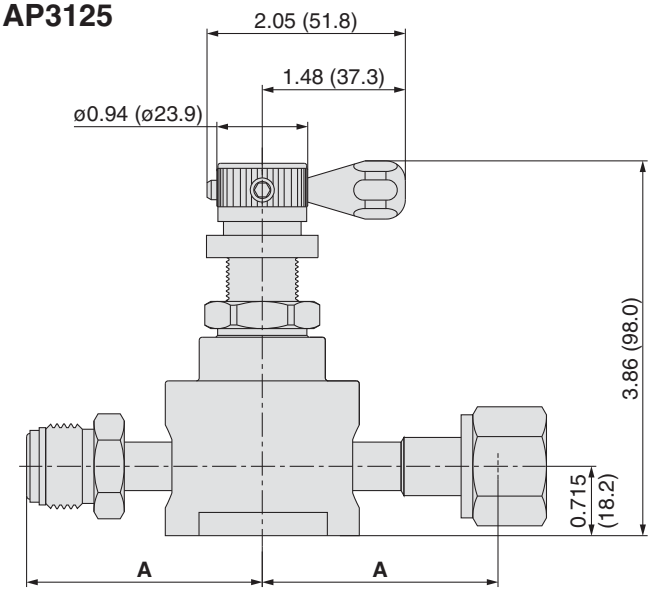

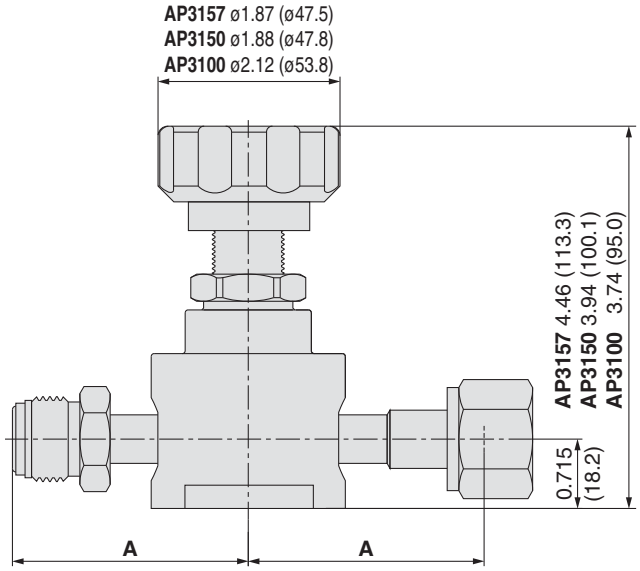

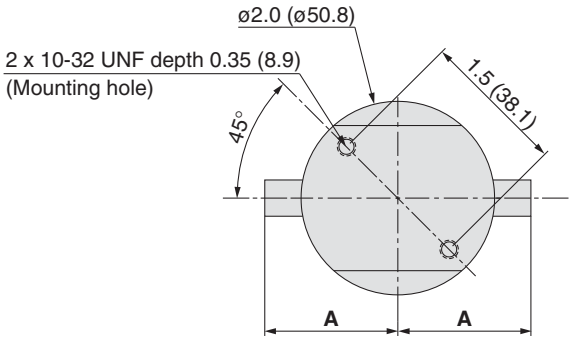

Bottom view

Connections	A	
	inch	(mm)
FV4	2.00	(50.8)
MV4		
TW6	1.375	(34.9)
FV8	2.425	(61.6)
MV8		
TW8	1.79	(45.4)
FV12	3.50	(88.9)
MV12		
TW12	3.25	(82.6)

Diaphragm Valve for Ultra High Purity

Manually operated type (For high flow)

Series AP3800 & 3900

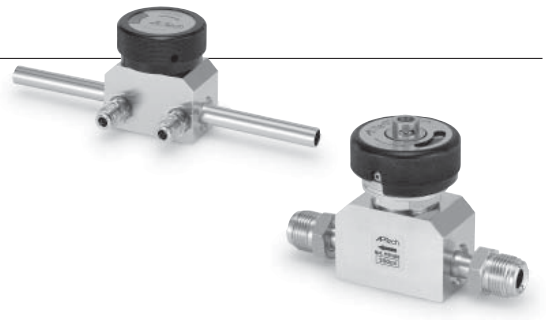

- **Suitable for UHP gas supply line**
- **Body material: 316L SS secondary remelt**
- **Purge ports and monoblock configurations available**
- **LOTO available (AP3900)**

How to Order

				(Inlet)	(Outlet)			
AP	3800	S	M	MV8	MV8	00		

Model

Code	Knob
3800	Round knob with open/close indication window
3900	Pull twist knob with LOTO

Material

Code	Body material
S	316L SS secondary remelt

Surface finish

Code	Surface finish Ra max
No code	15 min. (0.4mm) Standard
M	10 µin. (0.25 µm)
V	7 µin. (0.18 µm)
X	5 µin. (0.13 µm)

Connections (Inlet①, Outlet②)

Code	Connections
TW6	3/8 inch tube weld
FV8	1/2 inch face seal (Female)
MV8	1/2 inch face seal (Male)
TW8	1/2 inch tube weld
FV12	3/4 inch face seal (Female)
MV12	3/4 inch face seal (Male)
TW12	3/4 inch tube weld

Porting Configuration

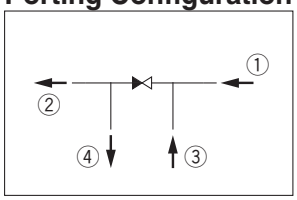

Purge port option

Code	Specification
No code	—
C	Capped purge port

Seat material

Code	Material
No code	PCTFE (Standard)
VS	Vespel®

Purge port *1)

Code	Inlet③	Outlet④
00	None	None
M0	Available	None
0B	None	Available
MB	Available	Available

*1) 1/4 inch face seal (Male) as standard.

Specifications

Operating Parameters		AP3800	AP3900
Gas		Select compatible materials of construction for the gas	
Operating pressure		Vacuum to 250 psig (1.7 MPa)	
Proof pressure		500 psig (3.4 MPa)	
Burst pressure		1000 psig (6.9 MPa)	
Ambient and operating temperature		-40 to 71 °C (No freezing) *1)	
Cv		2.8	
Leak rate	**Inboard leakage**	2×10^{-11} Pa·m³/sec	
	Outboard leakage	2×10^{-10} Pa·m³/sec *2)	
Across the seat leak		4×10^{-9} Pa·m³/sec *2)	
Surface finish		Ra max 15 µin. (0.4 µm) Option: 10 µin.(0.25 µm), 7µin.(0.18 µm), 5 µin.(0.13 µm)	
Connections		Face seal, Tube weld	
Installation		Bottom mount	
Internal volume		0.76 in³ (12.52 cm³)	
Mass		1.36 kg *3)	1.45 kg *3)
Knob		Round knob with open/close indication window	Pull twist knob *4)
LOTO (Lockout)		N/A	Standard

*1) -10 to 90 °C for Vespel® seat.
*2) Tested with Helium gas inlet pressure 125 psig (0.9 MPa).
*3) Mass, including individual boxed weight, may vary depending on connections or options.
*4) Handle must be pulled to turn open from closed.

Wetted Parts Material

Wetted Parts	S
Body	316L SS secondary remelt
Surface finish	Electropolish + Passivation
Diaphragm	316L SS
Seat	PCTFE (Option: Vespel®)

Dimensions

inch (mm)

AP3800

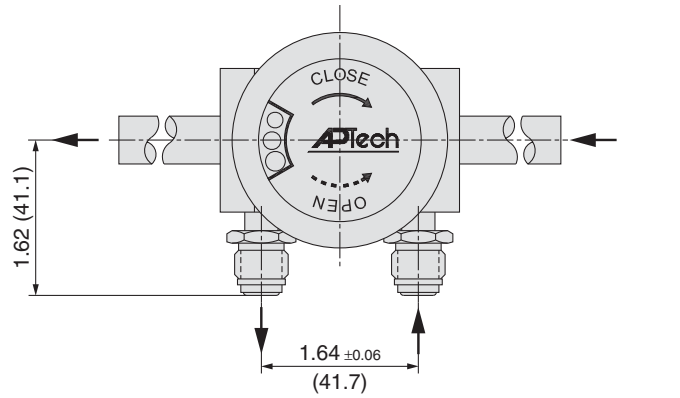

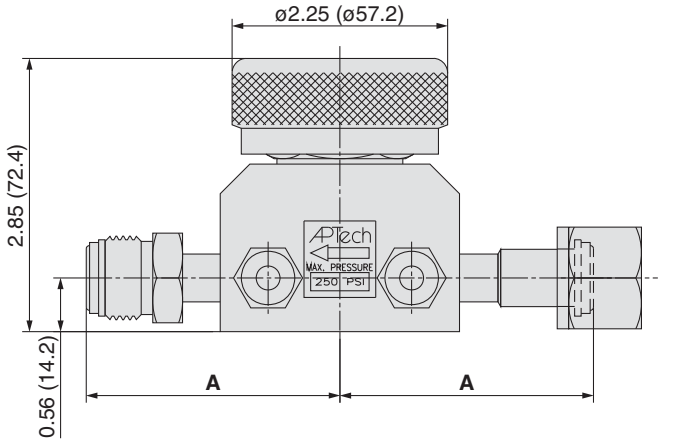

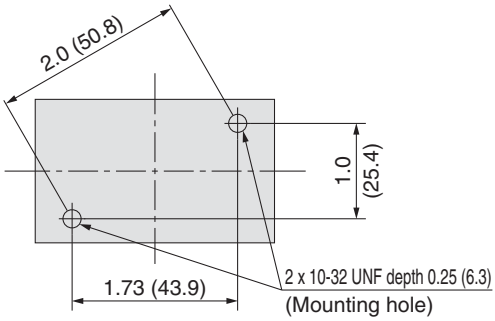

AP3900

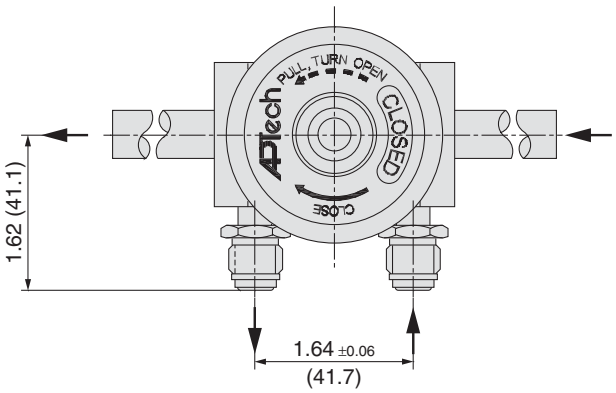

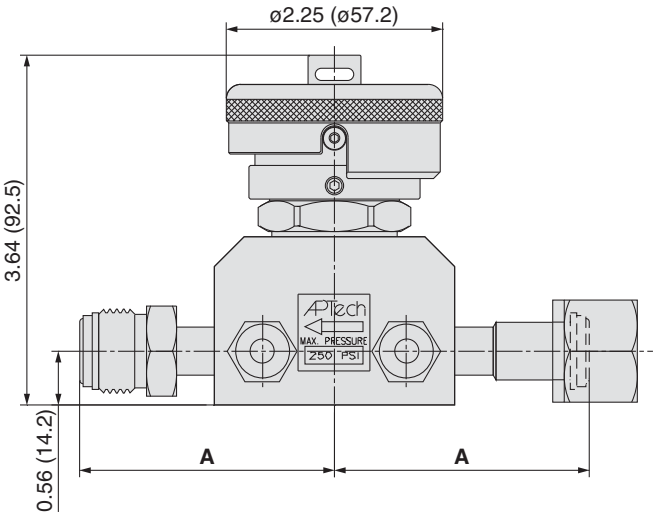

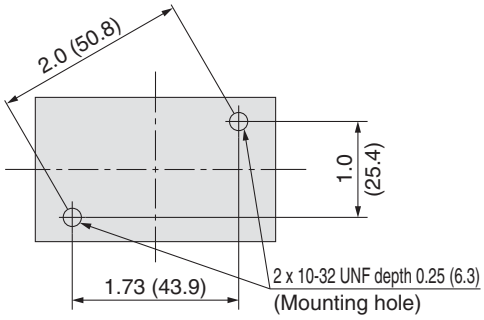

Connections	A	
	inch	(mm)
TW6	4.25	(108.0)
FV8	2.65	(67.3)
MV8		
TW8	4.25	(108.0)
FV12	3.20	(81.3)
MV12		
TW12	4.25	(108.0)

Made to Order

Change of porting configuration and products such as three port dual valves can be made. Please contact SMC for details.

Diaphragm Valve for Ultra High Purity

Manually operated type (Metal seated)

Series AP3260

- Suitable for UHP gas supply line
- Body material: 316L SS secondary remelt
- All metal wetted parts

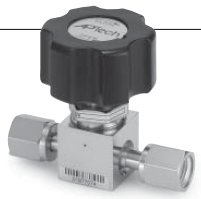

How to Order

AP32 60 S ☐ 2PW MV4 MV4 ☐ ☐

(Inlet) (Outlet)

Manually operated type

Material

Code	Body Material
S	316L SS secondary remelt

Surface finish

Code	Surface finish Ra max
No code	15 µin. (0.4 µm) Standard
M	10 µin. (0.25 µm)
V	7 µin. (0.18 µm)
X	5 µin. (0.13 µm)

Ports

Code	Ports
2PW	2 ports

Optional portings and porting configurations available. Please refer to P.125.

Connections (Inlet, Outlet)

Code	Connections
FV4	1/4 inch face seal (Female)
MV4	1/4 inch face seal (Male)
TW4	1/4 inch tube weld
FV6	3/8 inch face seal (Female)
MV6	3/8 inch face seal (Male)
TW6	3/8 inch tube weld

Face to face dimension *1)

Code	Dimension
No code	2.12 inch (53.8 mm) Standard
1.75	1.75 inch (44.5 mm)

*1) Only applies to TW4 connections.

Installation option

Code	Installation
No code	Bottom mount (Standard)
P	Panel Installation *2)

*2) Panel mounting hole: dia. 0.78 inch (19.8mm).

Specifications

Operating Parameters		AP3260
Gas		Select compatible materials of construction for the gas
Operating pressure		Vacuum to 125 psig (0.9 MPa)
Proof pressure		1000 psig (6.9 MPa)
Burst pressure		8000 psig (55.2 MPa)
Ambient and operating temperature		-40 to 90 °C (No freezing)
Cv		0.27
Leak rate	**Inboard leakage**	2×10^{-11} Pa·m³/sec
	Outboard leakage	2×10^{-10} Pa·m³/sec *1)
Across the seat leak		1×10^{-7} Pa·m³/sec *1)
Surface finish		Ra max 15 µin. (0.4 µm) Option: 10 µin. (0.25 µm), 7 µin. (0.18 µm), 5 µin. (0.13 µm)
Connections		Face seal, Tube weld
Installation		Bottom mount (Option: panel mount)
Internal volume		0.06 in³ (1.07 cm³)
Mass		0.36 kg *2)
Knob		Multi turn round knob

*1) Tested with Helium gas inlet pressure 125 psig (0.9 MPa).
*2) Mass, including individual boxed weight, may vary depending on connections or options.

Wetted Parts Material

Wetted Parts	S
Body	316L SS secondary remelt
Surface finish	Electropolish + Passivation
Diaphragm	Elgiloy®

Elgiloy® is a registered trademark of Elgiloy Specialty Metals.

Dimensions

inch (mm)

AP3260

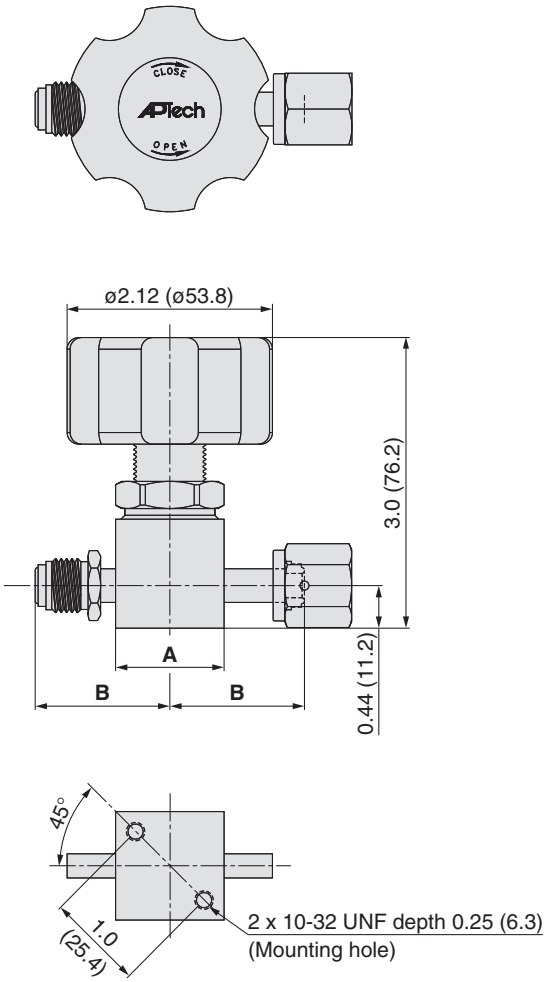

Material	Connections	A		B	
		inch	(mm)	inch	(mm)
S	FV4	1.12 sq.	(□28.4)	1.39	(35.3)
	MV4				
	TW4			1.06	(26.9)
	FV6			1.93	(49.0)
	MV6				
	TW6			1.325	(33.7)

LOTO Options
for Diaphragm Valves

∗ Made to order specifications

Lockout Device/For Air Operated Valve (Order Separately)

Product number: AP PL210

Feature

- Lockable by installing the AP PL210 to the actuation port of air operated valve (only available for N.C. with actuation port connection NPT 1/8 inch)
- Prevent accidental valve opening by manually shutting off actuation pressure
- Lockable only in the closed position
- Accept standard pad lock with 1/4 inch shackle
- Actuation port connection:10-32 UNF thread
- Actuation port pressure rating: Maximum 150 psig (1.0 MPa)

Operation

Push top button down and twist to close the valve. This feature allows the valve to stay in closed position even if actuation pressure is supplied into an actuation port. Valve opens by repositioning the button, then pressurizing the actuation port.

Series

AP3000, AP3113, AP3130, AP3540, AP4540, AP3200

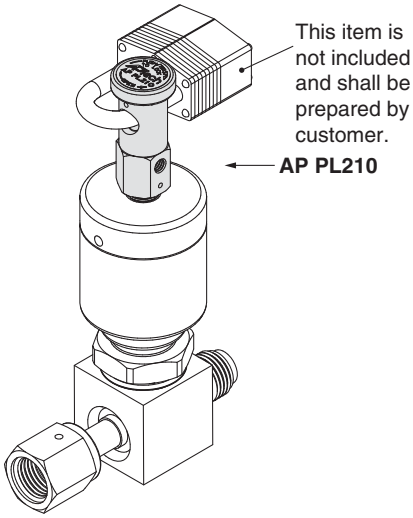

Lockout Device/For Manually Operated Valve (Order Separately)

Product number: AP PL225

Feature

- Lockable by installing the AP PL225 to the manually operated valve (only available for lever knob)
- Lockable in the closed position
- Accept standard pad lock with 1/4 inch shackle.

Series

AP3125, AP3625, AP4625

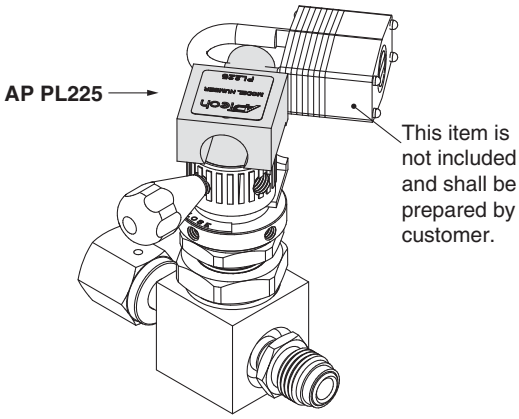

Hook for Operational Safety Device (OSD) (Order Separately)

Product number: AP PL227

Feature

- Secure valve in the closed position by installing the AP PL227 to the top of the handle.
- Prevents accidental opening of the valve.

Series

AP3125, AP3625, AP4625

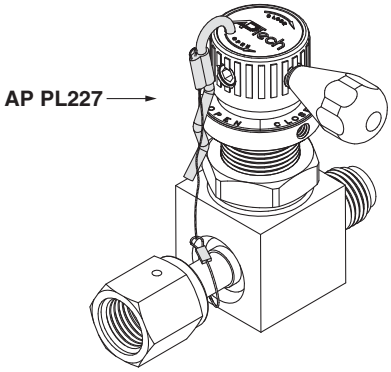

Diaphragm Valve
Porting Guide

∗ Made to order specifications

How to Order

					(①)	(②)	(③)	(④)			
AP	3650	S		4PWM	MV4	TW4	FV4	FV4			

Available series

Code	Series
30□□	AP3000 series
32□□	AP3200 series
35□□	AP3500 series
45□□	AP4500 series
36□□	AP3600 series
46□□	AP4600 series

Materials
Stainless steel

Surface finish
Depends on the product series

Ports

Code	Ports	Configuration
2PW	2 ports	Refer to the following (Port specification)
2PWA		
2PWB		
2PWC		
3PWD	3 ports	
3PWE		
3PWF		
3PWG		
3PWH		
3PWJ		
4PWK	4 ports	
4PWL		
4PWM		
4PWN		

Connections
(Number indicates the port location)

Code	Connections
No code	No port
FV4	1/4 inch face seal (Female)
MV4	1/4 inch face seal (Male)
TW4	1/4 inch tube weld
FV6	3/8 inch face seal (Female)
MV6	3/8 inch face seal (Male)
TW6	3/8 inch tube weld

Option
Depends on the product series

Examples of The Many Available options

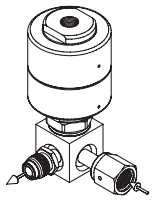

AP3000S
2PWC FV4 MV4

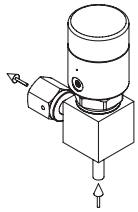

AP3550S
2PWB TW4 FV4

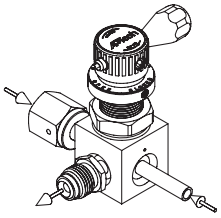

AP3625S
3PWD TW4 MV4 FV4

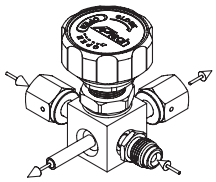

AP3650S
4PWM MV4 TW4 FV4 FV4

Port Specifications

Valves are illustrated top view looking down through the valve.
The traditional flow direction is INLET to OUTLET, but AP Tech valves may be employed in either flow direction.
Port locations are indicated by numbers.
INLET (Upstream) is defined as a port connected to the region below the valve seat. It is illustrated with an arrow pointing towards the valve body or an "empty" triangle on the schematic.
OUTLET (Downstream) is defined as a port connected to the region above the seat and below the diaphragm. It is illustrated with an arrow pointing away from the valve body or a "filled" triangle on the schematic.

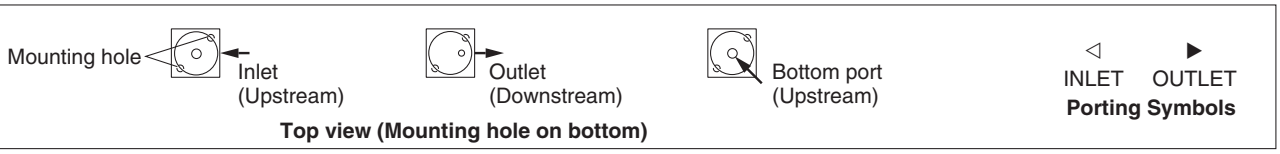

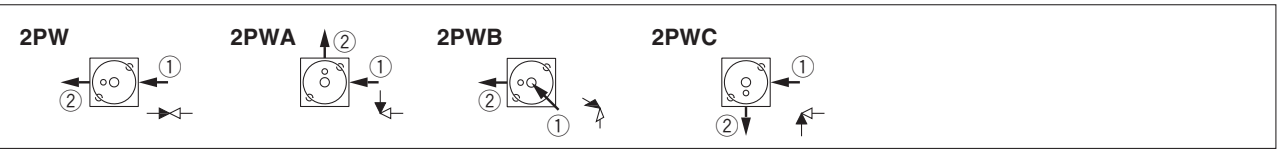

2 Ports

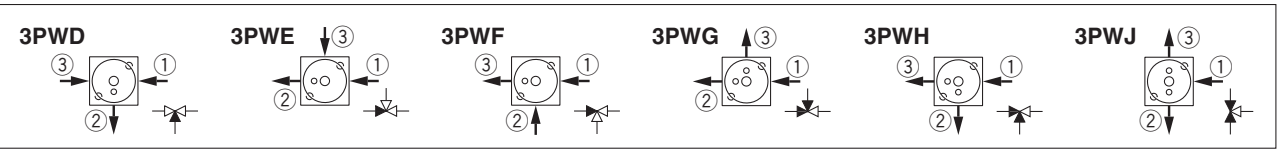

3 Ports

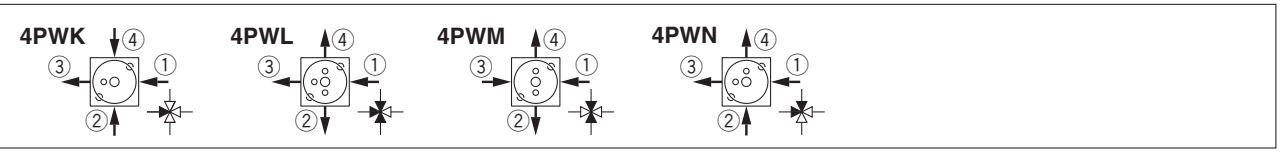

4 Ports

Process Gas Equipment / Diaphragm Valve Specific Product Precautions

Be sure to read before handling. Refer to back cover for Safety Instructions and P. 145 and 146 and the "Operation Manual" for common precautions. Operation manual is available from the SMC web site. http://www.smcworld.com

Selection

⚠ Warning

1. Confirm the specifications.

This product is used in gas delivery systems to shutoff gas flow. When selecting the product, confirm the operating conditions, such as type of gas, operating pressure (inlet and outlet), flow rate, actuating pressure, operating temperature etc., and use within the operating range specified in the catalog. The product may not be suitable for use with specific gases and applications/environments. Check the compatibility of the product materials with the process gas.
Design the equipment and select the product by understanding the characteristics of gas.

Mounting

⚠ Warning

1. Confirm the mounting direction of the product.

Inlet ports are labeled with an "IN" mark. The outlet ports are usually not labeled but may be labeled with an "OUT" mark. Orient the valve as specified by the system designer.

2. Connect actuation pressure to the valve actuator connection. (Air operated type)

Use nitrogen or clean dry air for actuation pressure. The connection may be a 1/8 inch NPT female thread or 10-32 female thread or M5 depending on the valve model.

3. After installation, check internal leakage (leakage across seat) with inert gases.

Perform a helium leak test depending on applications.

Maintenance

⚠ Warning

1. If a valve requires repair, contact SMC.

Operation (Air operate type)

⚠ Warning

1. Use nitrogen or clean dry air as actuation pressure.

2. Confirm the valve type (N.C. or N.O.).

In the case of N.C. (Normally Closed), valve will open when applying actuation pressure to the valve actuator connection and valve will close when actuation pressure is vented to atmospheric pressure. In the case of N.O. (Normally Open), its actuation mechanism is opposite to the N.C. type. Valve will close when applying actuation pressure to the valve actuator connection.

3. Apply actuation pressure within the range of specifications.

Operation (Manually operated type)

⚠ Warning

4. When closing the valve, rotate the handle clockwise until it completely stops.

There is the internal stop in the handle or in the valve body. Rotate the handle clockwise until the internal stop is reached and it completely stops.

5. When closing the valve with LOTO feature, rotate the handle fully clockwise until the stop. (AP3657, AP4657, AP3157, AP3900)

When the handle is fully clockwise, the indicator plate roller is aligned with a vertical slot in the handle allowing the handle to drop downward. This feature prevents the valve from being accidentally opened.

6. When opening the valve, rotate the handle counterclockwise until it completely stops.

There is the internal stop in the handle. Rotate the handle counterclockwise until the internal stop is reached and it completely stops.

7. When opening the valve with LOTO feature, the handle must first be lifted up, away from the valve body, and rotated counterclockwise until it completely stops. (AP3657, AP4657, AP3157, AP3900)

When valve is closed, handle will not rotate as the fixed indicator plate roller is positioned within the vertical slot in the handle.The handle must first be lifted up away from the valve body and rotated counterclockwise until it completely stops.

8. Do not use a tool when rotating the handle.

When the handle is rotated with a tool, it may apply excessive torque to the handle or inside the valve body and it may cause damage. Rotate the handle by hand.

9. When locking the valve with LOTO feature in the closed position, use safety lockout hasp. (AP3657, AP4657, AP3157, AP3900)

The valve with LOTO feature has a built in LOTO capability. When using LOTO feature, rotate the handle clockwise and insert safety lockout hasp into lock stem slot.

Check Valve

Vacuum Generator

Flow Switch

Check Valve

Series AP64

- **Simple design with free of springs and poppets**
- **Reseals with minimal back pressure**
- **Low cracking pressure**

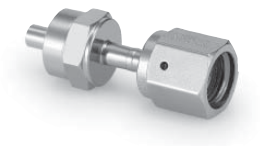

How to Order

AP64 S □ MV4 MV4 □

(Inlet) (Outlet)

Material

Code	Body material
S	316L SS secondary remelt

Seat material

Code	Material
No code	FKM (Standard)
NP	Neoprene®

Surface finish

Code	Surface finish Ra max
No code	15 µin. (0.4 µm) Standard
M	10 µin. (0.25 µm)
X	5 µin. (0.13 µm)

Connections (Inlet, Outlet)

Code	Connections
MV4	1/4 inch face seal (Male)
FV4	1/4 inch face seal (Female)
TW4	1/4 inch tube weld
MV6	3/8 inch face seal (Male)
FV6	3/8 inch face seal (Female)
TW6	3/8 inch tube weld

Specifications

Operating Parameters		AP64
Gas		Select compatible materials of construction for the gas
Inlet pressure		Vacuum to 3500 psig (24.1 MPa)
Cracking pressure *1)		3 psi (0.023 MPa) differential *2)
Maximum backpressure		3500 psig (24.1 MPa)
Proof pressure		4000 psig (27.6 MPa)
Burst pressure		10000 psig (69 MPa)
Ambient and operating temperature		-10 to 71 °C (No freezing)
Cv		0.4 max
Leak rate	**Inboard leakage**	2×10^{-11} Pa·m³/sec
	Outboard leakage	2×10^{-11} Pa·m³/sec *3)
Surface finish		Ra max 15 µin. (0.4 µm) Option: 10 µin. (0.25 µm), 5 µin. (0.13 µm)
Connections		Face seal, Tube weld
Internal volume		0.122 in.³ (2 cm³)
Mass		0.02 kg *4)

*1) Cracking pressure is a nominal value which may vary depending on the application and operating conditions.
*2) 6 psi (0.04 MPa) differential for Neoprene® seat.
*3) Tested with inlet pressure 500 psig (3.5 MPa).
*4) Mass, including individual boxed weight, may vary depending on connections or options.

Wetted Parts Material

Wetted Parts	S
Body	316L SS secondary remelt
Surface finish	Electropolish + Passivation
Seal	FKM (Option: Neoprene®)

Neoprene® is registered trademarks of DuPont.

Construction

AP64

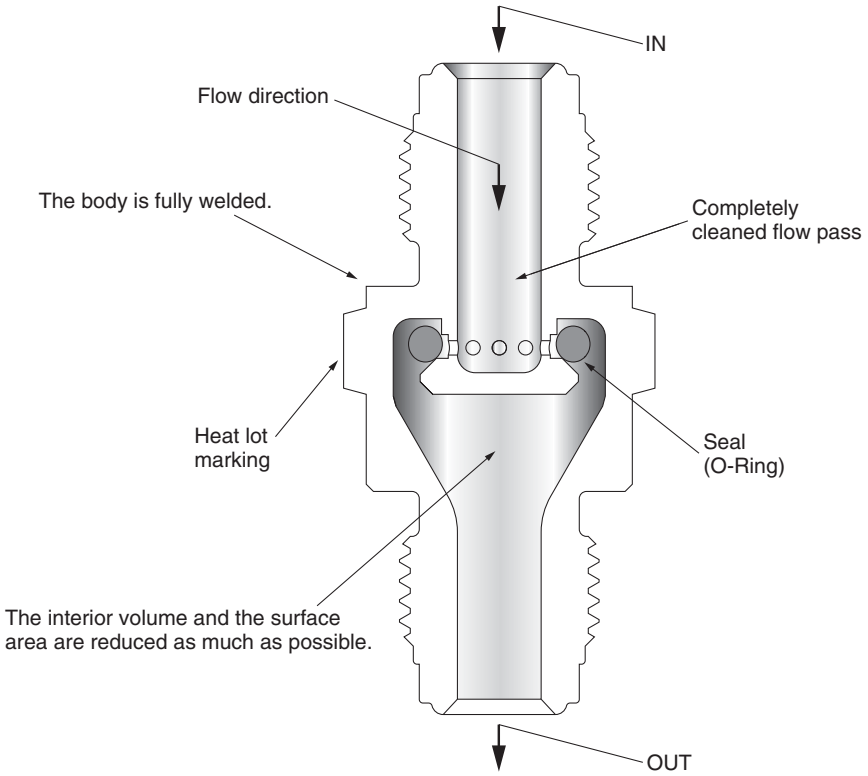

Dimensions

inch (mm)

AP64

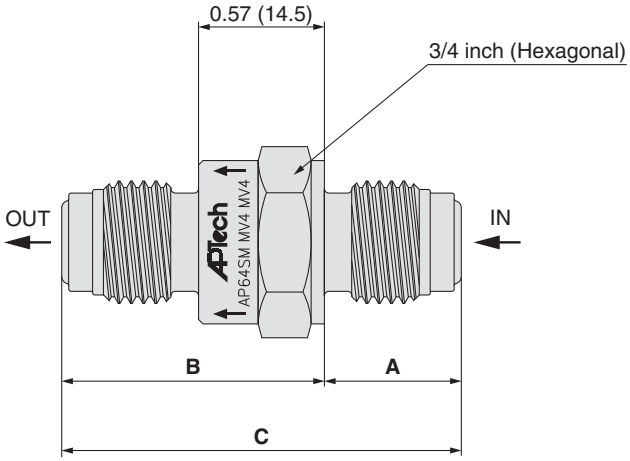

Connections		A		B		C	
Inlet	Outlet	inch	(mm)	inch	(mm)	inch	(mm)
MV4	**MV4**	0.62	(15.7)	1.19	(30.2)	1.81	(46.0)
MV4	**FV4**			1.50	(38.1)	2.12	(53.8)
FV4	**FV4**	0.93	(23.6)			2.43	(61.7)
FV4	**MV4**			1.19	(30.2)	2.12	(53.8)
TW4	**TW4**	0.34	(8.6)	0.91	(23.1)	1.25	(31.8)

Vacuum Generator

Series AP7 & 70

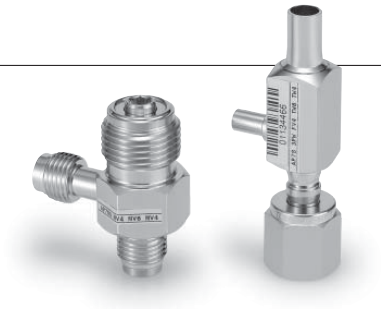

- **Max. vacuum pressure: -26 in.Hg (-88 kPa)**
- **AP70 series**
  - **Compact**
  - **Fine vacuum efficiency**
- **AP7 series**
  - **All connections available with all ports**

How to Order

AP 70 S MV4 MV6 FV4

(Inlet) (Vent) (Vacuum)

Model

Code	Feature
70	Compact and high performance

Material

Code	Body material
S	316L SS

Connections (Inlet N2)

Code	Connections
MV4	1/4 inch face seal (Male)

Connections (Vent)

Code	Connections
MV6	3/8 inch face seal (Male)

Connections (Vacuum)

Code	Connections
MV4	1/4 inch face seal (Male)
FV4	1/4 inch face seal (Female)
TW4	1/4 inch tube weld
MV6	3/8 inch face seal (Male)
FV6	3/8 inch face seal (Female)
TW6	3/8 inch tube weld

AP 7 S 3PW MV4 MV6 FV4

(Inlet) (Vent) (Vacuum)

Model

Code	Feature
7	Optional connections available

Material

Code	Body material
S	316L SS

Ports

Code	Ports
3PW	3 ports

Connections (Inlet N2, Vent, Vacuum)

Code	Connections
MV4	1/4 inch face seal (Male)
FV4	1/4 inch face seal (Female)
TW4	1/4 inch tube weld
MV6	3/8 inch face seal (Male)
FV6	3/8 inch face seal (Female)
TW6	3/8 inch tube weld

Specifications

Operating Parameters		AP7	AP70
Gas (Inlet N2 port)		N_2	
Gas (Vacuum port)		Select compatible materials of construction for the gas	
N2 Inlet pressure		70 to 110 psig (0.48 to 0.76 MPa)	
Vacuum port maximum pressure		3500 psig (24.1 MPa)	
Proof pressure (Vacuum)		5000 psig (34.5 MPa)	
Burst pressure		10000 psig (69 MPa)	
Maximum vacuum pressure		-26 in.Hg (-88 kPa) *1)	
Ambient and operating temperature		-40 to 71 °C	
Connections	**Inlet**	Face seal, Tube weld	1/4 inch face seal (Male)
	Vent	Face seal, Tube weld	3/8 inch face seal (Male)
	Vacuum	Face seal, Tube weld	
Mass		0.11 kg *2)	0.13 kg *2)

*1) At inlet pressure 80 psig (0.55 MPa) and flow rate 60 slpm.
*2) Mass, including individual boxed weight, may vary depending on connections or options.

Wetted Parts Material

Wetted Parts	S
Body	316L SS

Dimensions

inch (mm)

AP7

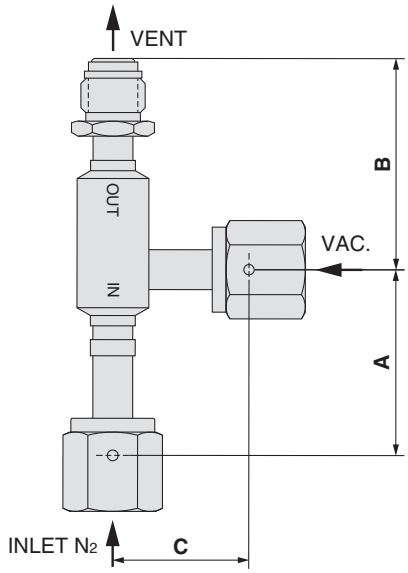

Connections (Inlet)	A inch	A (mm)
MV4	1.62	(41.1)
FV4		
TW4	1.25	(31.8)
MV6	2.13	(54.1)
FV6		
TW6	1.25	(31.8)

Connections (Vent)	B inch	B (mm)
MV4	1.83	(46.5)
FV4		
TW4	1.46	(37.1)
MV6	2.34	(59.4)
FV6		
TW6	1.46	(37.1)

Connections (Vacuum)	C inch	C (mm)
MV4	1.18	(30.0)
FV4		
TW4	0.81	(20.6)
MV6	1.69	(42.9)
FV6		
TW6	0.81	(20.6)

AP70

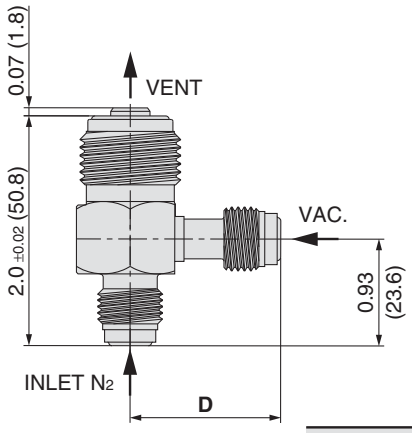

Connections (Vacuum)	D inch	D (mm)
MV4	1.31	(33.3)
FV4		
TW4	0.97	(24.6)
MV6	1.85	(47.0)
FV6		
TW6	0.97	(24.6)

Exhaust Characteristics

AP7

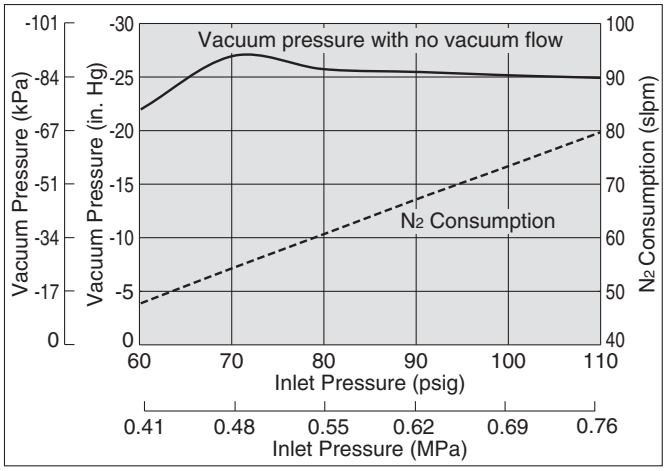

AP70

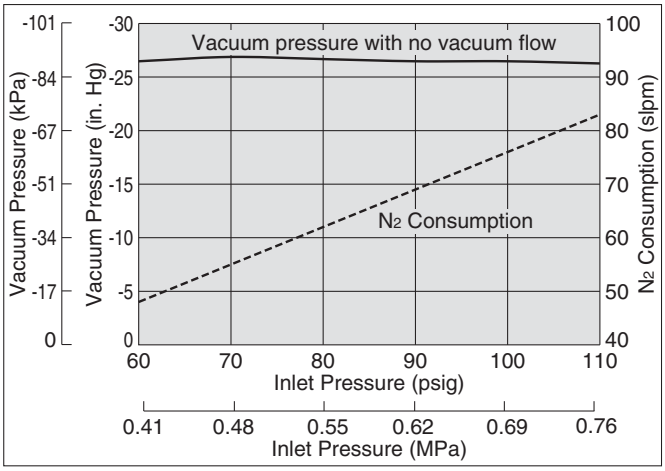

Flow Characteristics

AP7

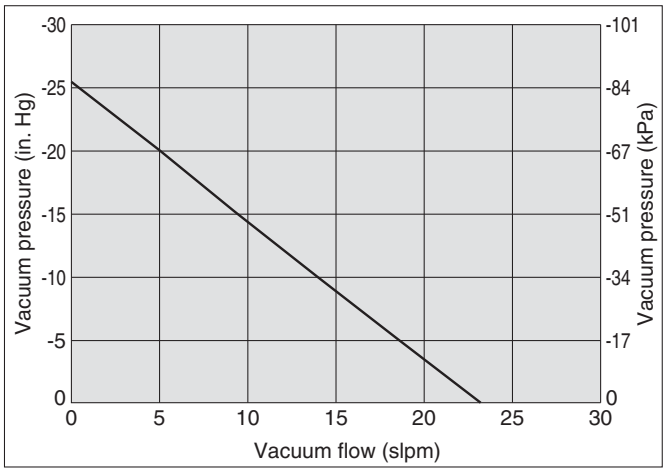

AP70

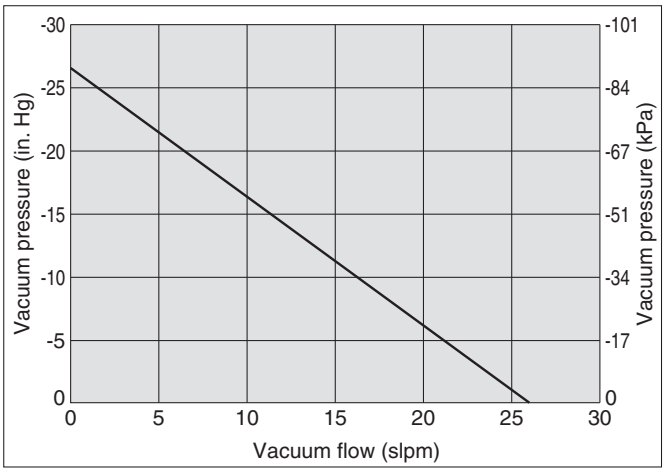

Vacuum Generator

Module

Series AP71

- **Unique compact design by integrating vacuum generator, air operated valve and check valve**
- **Max. vacuum pressure: -26 in.Hg (-88 kPa)**
- **Integrate N.C. air operated valve**
- **Constant bleed option to maintain inert vent line**

How to Order

AP71 S MV4 FV6 TW4 ☐

(Inlet) (Vent) (Vacuum)

Material

Code	Body material
S	316L SS

Connections (Inlet N_2 port, Vent, Vacuum)

Code	Connections	Inlet	Vent	Vacuum
MV4	1/4 inch face seal (Male)	●	●	●
FV4	1/4 inch face seal (Female)		●	●
TW4	1/4 inch tube weld			●
MV6	3/8 inch face seal (Male)		●	
FV6	3/8 inch face seal (Female)		●	
TW6	3/8 inch tube weld		●	

Bleed options

Code	Bleed options
No code	No bleed option (Standard)
CB005	2.5 slpm
CB009	5 slpm
CB013	8 slpm
CB023	15 slpm

Specifications

Operating Parameters		**AP71**
Gas (Inlet N_2 port)		N_2
Gas (Vacuum)		Select compatible materials of construction for the gas
N_2 Inlet pressure		70 to 110 psig (0.48 to 0.76 MPa)
Vacuum port maximum pressure		3500 psig (24.1 MPa)
Proof pressure (Vacuum)		5000 psig (34.5 MPa)
Burst pressure (Vacuum)		10000 psig (69 MPa)
Maximum vacuum pressure		-26 in.Hg (-88 kPa) *1)
Ambient and operating temperature		-10 to 71 °C
Cracking pressure (Check valve)		3 psid (0.023 MPa)*2)
Air operated	**Status**	Normally closed (N.C.)
	Actuation pressure	60 to 110 psig (0.4 to 0.76 MPa)
	Actuation port	10-32 UNF thread
Connections	**Inlet**	1/4 inch face seal (Male)
	Vent	1/4, 3/8 inch face seal, 3/8 inch tube weld
	Vacuum	1/4 inch face seal, Tube weld
Mass		0.14 kg *3)

*1) At inlet pressure 80 psig (0.55 MPa) and flow rate 60 slpm.
*2) Cracking pressure is a nominal value which may vary depending on the application and operating conditions.
*3) Mass, including individual boxed weight, may vary depending on connections or options.

Option

Bleed

Bleed option provides constant low flow of N_2 to maintain inert atmosphere in vent line.
Following 4 options are available:

Option	Bleed *
CB005	1 to 2.5 slpm
CB009	2 to 5 slpm
CB013	5 to 8 slpm
CB023	10 to 15 slpm

* At 80 pisg (0.55 MPa) N_2 gas.

Wetted Parts Material

Wetted Parts	**AP71**
Body	316L SS
Poppet	303 SS
Piston	303 SS
Spring	302 SS
Check valve seat	FKM

Construction

AP71

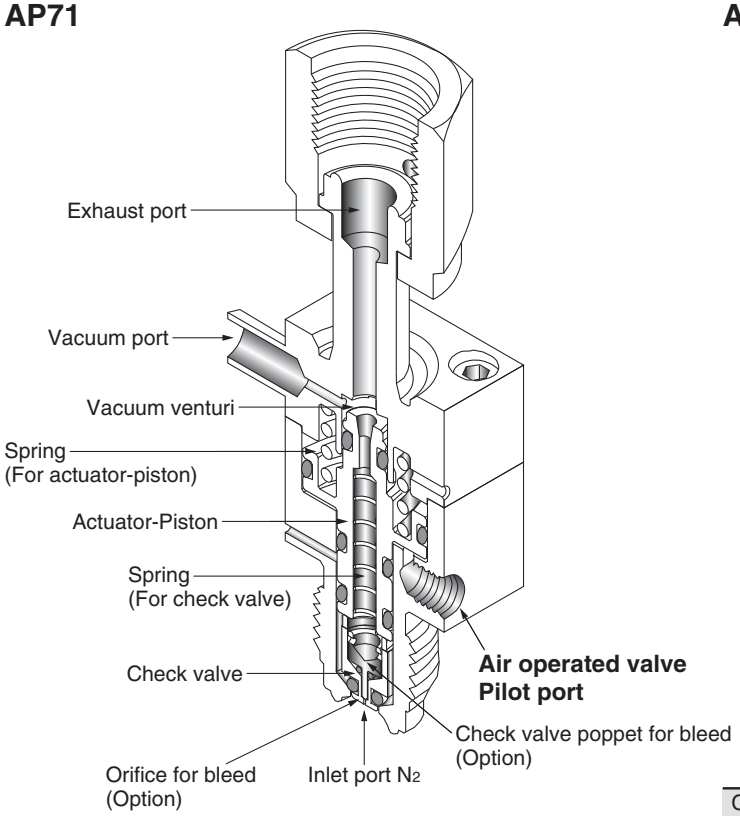

Dimensions

inch (mm)

AP71

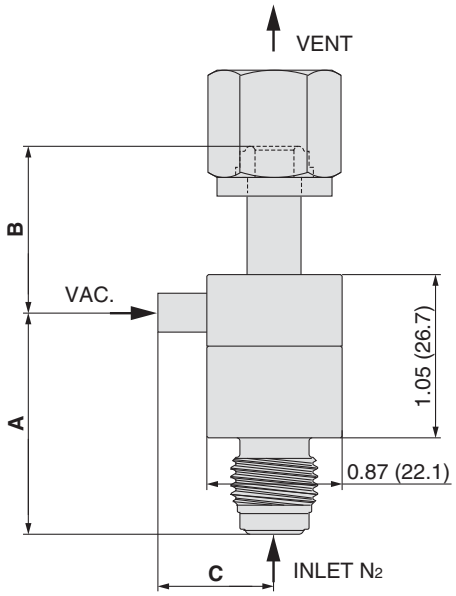

Connections (Inlet)	A	
	inch	(mm)
MV4	1.43	(36.3)

Connections (Vent)	B	
	inch	(mm)
MV4	1.07	(27.2)
FV4		
MV6	1.64	(41.7)
FV6		
TW6	0.96	(24.4)

Connections (Vacuum)	C	
	inch	(mm)
MV4	1.39	(35.3)
FV4		
TW4	0.75	(19.1)

Exhaust Characteristics

AP71

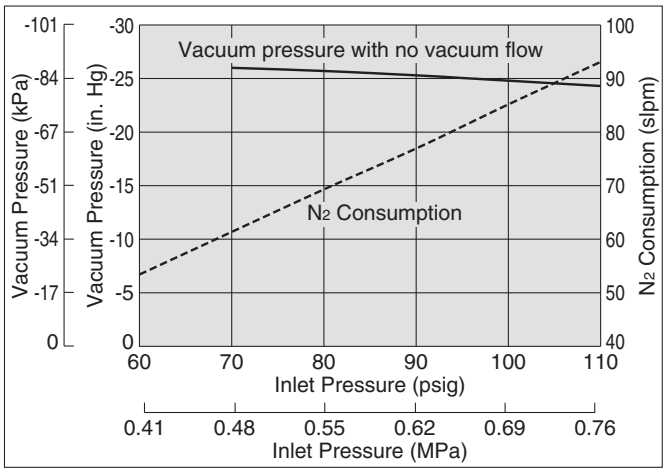

Flow Characteristics

AP71

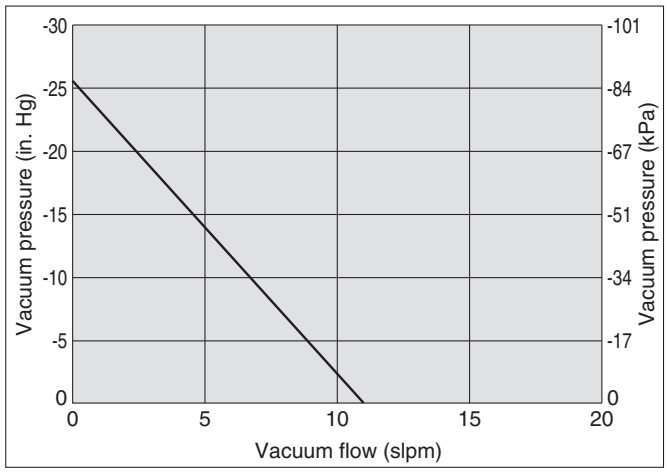

Vacuum Generator

Module

Series AP72

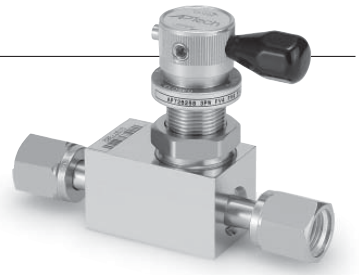

- **Unique compact design by integrating vacuum generator, diaphragm valve and check valve**
- **Max. vacuum pressure: -26 in.Hg (-88 kPa)**
- **Air operated or manually operated type is available as diaphragm valve**
- **Constant bleed option to maintain inert vent line**

How to Order

AP72 625 S 3PW MV4 FV6 TW4 ☐ ☐

(Inlet) (Vent) (Vacuum)

Material

Code	Body material
S	316L SS

Ports (Refer to the porting configuration)

Code	Ports
3PW	3 ports
3PWA	3 ports (Angle type)
4PW	4 ports

Model

Code	Actuation	Knob
540	Air operated	—
550		
600	Manual operated	Multi turn round knob
625		1/4 turn lever knob
650		1/4 turn round knob with open/close indication window

Bleed options

Code	Bleed options
No code	No bleed option (Standard)
CB009	5 slpm
CB013	8 slpm
CB023	15 slpm

Diaphragm valve seat material

Code	Material
No code	PCTFE (Standard)
VS	Vespel®

Connections (Inlet N_2 port, Vent, Vacuum)

Code	Connections	Inlet	Vent	Vacuum
MV4	1/4 inch face seal (Male)	●	●	●
FV4	1/4 inch face seal (Female)	●	●	●
TW4	1/4 inch tube weld			●
MV6	3/8 inch face seal (Male)		●	
FV6	3/8 inch face seal (Female)		●	
TW6	3/8 inch tube weld		●	

Porting Configuration

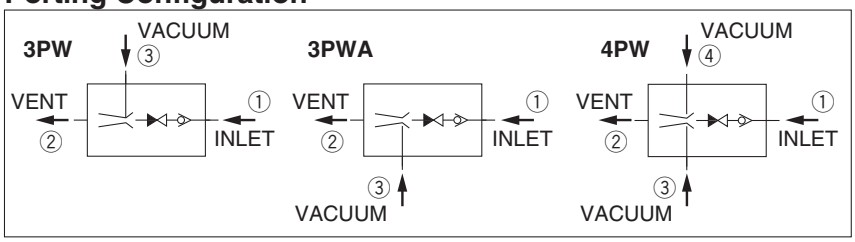

Specifications

Operating Parameters		AP72540	AP72550	AP72600	AP72625	AP72650
Gas (Inlet N_2 port)		N_2				
Gas (Vacuum)		Select compatible materials of construction for the gas				
N_2 Inlet pressure		70 to 110 psig (0.48 to 0.76 MPa)				
Vacuum port maximum pressure		3000 psig (20.7 MPa)				
Proof pressure (Vacuum)		5000 psig (34.5 MPa)				
Burst pressure		10000 psig (69 MPa)				
Maximum vacuum pressure		-26 in.Hg (-88 kPa) *1)				
Ambient and operating temperature		-10 to 71°C				
Cracking pressure (Check valve)		3 psid (0.023 MPa) *2)				
Leak rate	**Inboard leakage**	2×10^{-11} Pa·m³/s				
	Outboard leakage	2×10^{-10} Pa·m³/s *3)				
Across the seat leak		4×10^{-9} Pa·m³/s *3)				
Connections	**Inlet**	1/4 inch face seal				
	Vent	1/4, 3/8 inch face seal, 3/8 inch tube weld				
	Vacuum	1/4 inch face seal, 1/4 inch tube weld				
Mass		0.82 kg *4)				

*1) At inlet pressure 80 psig (0.55 MPa) and flow rate 60 slpm.
*2) Cracking pressure is a nominal value which may vary depending on the application and operating conditions.
*3) Tested with Helium gas inlet pressure 250 psig (1.7 MPa). 125 psig (0.9 MPa) for AP72540
*4) Mass, including individual boxed weight, may vary depending on connections or options.

Air operated type

Model	AP72540	AP72550
Status	Normally closed (N.C.)	
Actuation pressure	70 to 110 psig (0.48 to 0.76 MPa)	
Actuation port connection	NPT 1/8 inch	10-32 UNF thread
Actuation port location	Top	Side

Manually operated type

Model	AP72600	AP72625	AP72650
Knob	Multi turn round knob	1/4 turn lever knob	1/4 turn round knob with open/close indication window

Option

Bleed

Provides constant low flow of N_2 to maintain inert atmosphere in vent line.

Following 3 options are available:

Option	Bleed *
CB009	2 to 5 slpm
CB013	5 to 8 slpm
CB023	10 to 15 slpm

* At 80 pisg (0.55 MPa) N_2 gas.

Material

Material	S
Body	316L SS
Surface finish	Electropolish + Passivation
Diaphragm	Elgiloy®
Diaphragm valve seat	PCTFE (Option: Vespel®)
Check valve seat	FKM

Dimensions

inch (mm)

AP72

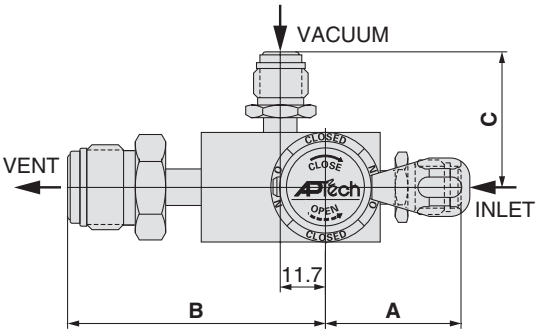

Top view

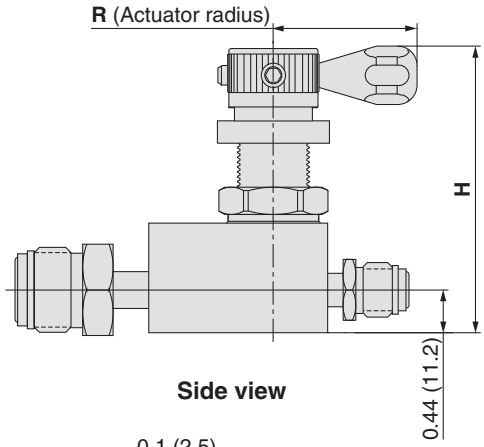

Side view

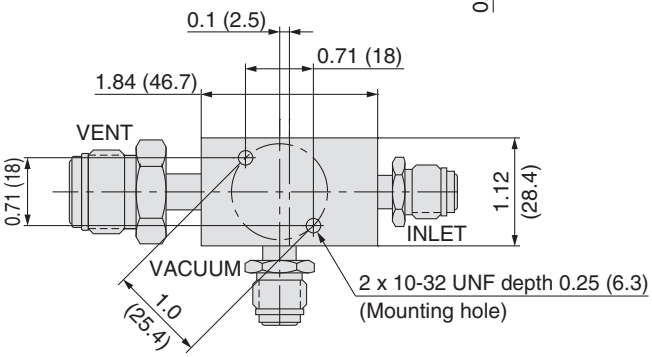

Bottom view

Model	R		H	
	inch	(mm)	inch	(mm)
AP72540	0.73	(18.5)	3.49	(88.6)
AP72550	0.69	(17.4)	3.28	(83.3)
AP72600	1.06	(26.9)	3.00	(67.1)
AP72625	1.48	(37.6)	2.94	(74.7)
AP72650	0.94	(23.9)	3.02	(76.7)

Connections (Inlet)	A	
	inch	(mm)
MV4	1.39	(35.3)
FV4		

Connections (Vent)	B	
	inch	(mm)
MV4	2.11	(53.6)
FV4		
MV6	2.65	(67.3)
FV6		
TW6	2.05	(52.0)

Connections (Vacuum)	C	
	inch	(mm)
MV4	1.39	(35.3)
FV4		
TW4	1.06	(26.9)

Exhaust Characteristics

AP72

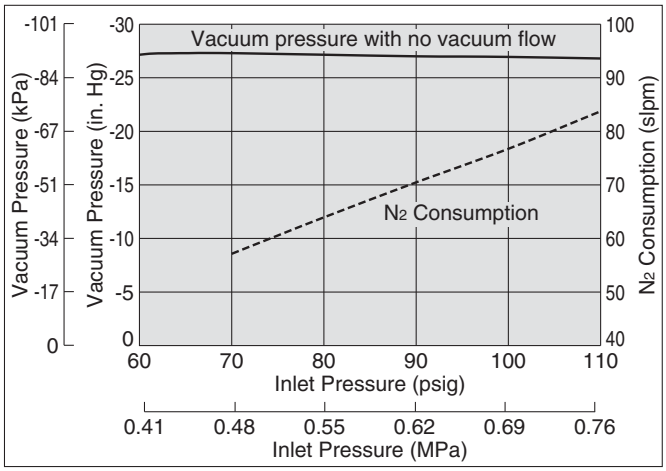

Flow Characteristics

AP72

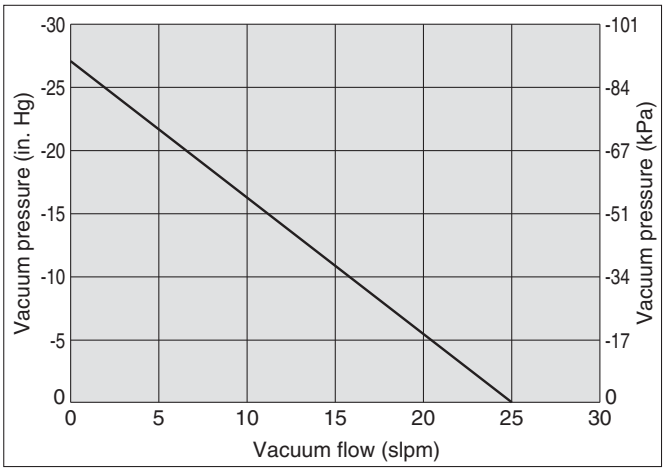

Elgiloy® is a registered trademark of Elgiloy Specialty Metals. Vespel® is a registered trademark of DuPont.

Flow Switch

Series AP74

- 6 flow trip points available, from 2 to 100 slpm
- Body material: 316L SS secondary remelt
- High pressure Max. 3500 psig (24.1 MPa)
- Detect excess flow by N.C. or N.O. contact output with non-wetted reed switch tripped by float with encapsulated magnet (SPDT, 3 wire / 2 position)

How to Order

AP74 100 S [ ] MV4 MV4

(Inlet) (Outlet)

Size

Code	Flow trip reference points *1)
002	2 slpm
005	5 slpm
010	10 slpm
025	25 slpm
050	50 slpm
100	100 slpm

*1) To obtain the nominal trip point in process gases other than nitrogen or pressures other than 100psig (0.69 MPa), please refer to the Precaution of Selection (P.139).

Connections (Inlet, Outlet)

Code	Connections
MV4	1/4 inch face seal (Male)
FV4	1/4 inch face seal (Female)
TW4	1/4 inch tube weld

Surface finish

Code	Surface finish Ra max
No code	15 µin. (0.4 µm) Standard
M	10 µin. (0.25 µm)

Material

Code	Body material
S	316L SS secondary remelt

Specifications

Operating Parameters		AP74002	AP74005	AP74010	AP74025	AP74050	AP74100
Gas		Select compatible materials of construction for the gas					
Source pressure		Vacuum to 3500 psig (24.1 MPa)					
Flow trip reference points *1) *2)		2 slpm	5 slpm	10 slpm	25 slpm	50 slpm	100 slpm
Accuracy		±10% of trip point or 0.5 slpm, whichever is greater					
Installation orientation		Inlet port at the bottom (Vertical within 8°)					
Pressure drop at trip point		0.5psi (0.0034 MPa) differential *3)					
Proof pressure		5000 psig (34.5 MPa)					
Burst pressure		10000 psig (69 MPa)					
Ambient and operating temperature		-23 to 80 °C (No freezing)					
Leak rate	**Inboard leakage**	2×10^{-11} Pa·m³/s					
	Outboard leakage	2×10^{-11} Pa·m³/s *4)					
Surface finish		Ra max 15 µin. (0.4 µm) Option: 10 µin. (0.25 µm)					
Connections		Face seal, Tube weld					
Reed switch	**Type**	SPDT (3 wire / 2 position)					
	Power	DC 30 V (3 W max)					
	Switching current	0.2A max					
	Carrying current	0.5A max					
	Initial contact resistance	0.1 Ω or less					
Cable	**Wire gauge**	AWG24 (PVC jacket)					
	Cable length	10 ft. (3 m)					
	Lead color	Blue: common					
		Brown: normally closed					
		Black: normally open					
Internal volume		0.12 in³ (1.9 cm³)					
Weight		0.11 kg *5)					

*1) Trip point varies slightly with temperature change, ±2% over the specified operating range.
*2) At N_2 gas 100 psig (0.69 MPa). To obtain the nominal trip point in process gases other than nitrogen or pressures other than 100 psig (0.69 MPa), please refer to the Precaution on Selection (P.139).
*3) Pressure drop at trip point.
*4) Tested with Helium gas inlet pressure 500 psig (3.5 MPa).
*5) Mass, including individual boxed weight, may vary depending on connections or options.

Wetted Parts Material

Wetted Parts	S
Body	316L SS secondary remelt
Surface finish	Electropolish + Passivation
Float	316L SS

Dimensions

inch (mm)

AP74

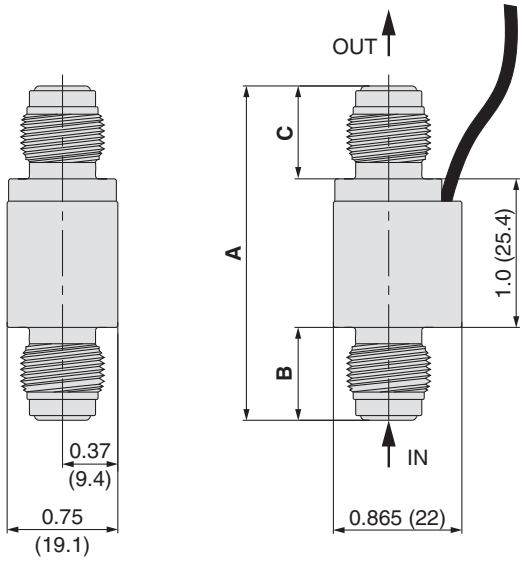

Connections		A		B		C	
Inlet	Outlet	inch	(mm)	inch	(mm)	inch	(mm)
MV4	**MV4**	2.25	(57.2)	0.625	(15.9)	0.625	(15.9)
FV4	**FV4**	3.99	(101.4)	1.495	(38.0)	1.495	(38.0)
TW4	**TW4**	2.25	(57.2)	0.625	(15.9)	0.625	(15.9)
MV4	**FV4**	3.12	(79.3)			1.495	(38.0)
MV4	**TW4**	2.25	(57.2)			0.625	(15.9)
FV4	**MV4**	3.12	(79.3)	1.495	(38.0)		
FV4	**TW4**						
TW4	**MV4**	2.25	(57.2)	0.625	(15.9)		
TW4	**FV4**	3.12	(79.3)			1.495	(38.0)

Flow Switch

For high flow

Series AP74B

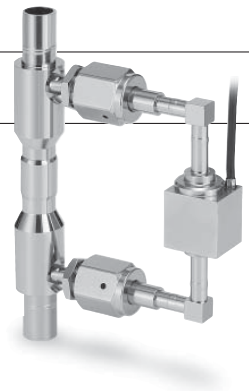

- Bypass design suitable for high flow (BSGS) application
- 7 flow trip points available, from 225 to 2600 slpm
- Horizontal or vertical installation orientation is available
- Main line 1/2 inch or 3/4 inch size available

How to Order

AP74B V 500 S M FV8 MV8

(Inlet) (Outlet)

Installation orientation

Code	Orientation
H	Horizontal
V	Vertical

Size

Code	Flow trip reference points *1)
225	225 slpm
350	350 slpm
500	500 slpm
950	950 slpm
1100	1100 slpm
1650	1650 slpm
2600	2600 slpm

*1) As N_2 gas 100 psig (0.69 MPa). To obtain the nominal trip point in process gases other than nitrogen or pressures other than 100 psig (0.69 MPa), please refer to the Precaution on Selection (P.139).

Material

Code	Body material
S	316L SS

Surface finish

Code	Surface finish Ra max
M	10 µin. (0.25 µm)

Connections

Code	Connections (Inlet, Outlet)	Size						
		225	350	500	950	1100	1650	2600
MV8	1/2 inch face seal (Male)	●	●	●	●			
FV8	1/2 inch face seal (Female)	●	●	●	●			
TW8	1/2 inch tube weld	●	●	●	●			
MV12	3/4 inch face seal (Male)					●	●	●
FV12	3/4 inch face seal (Female)					●	●	●
TW12	3/4 inch tube weld					●	●	●

Installation Orientation

AP74BH Horizontal **AP74BV Vertical**

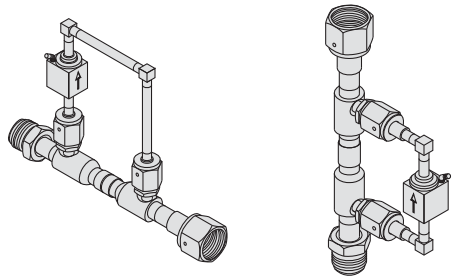

Specifications

Operating parameters		AP74B□225	AP74B□350	AP74B□500	AP74B□950	AP74B□1100	AP74B□1650	AP74B□2600
Gas		Select compatible materials of construction for the gas						
Source pressure		Vacuum to 3500 psig (24.1 MPa)				Vacuum to 2400 psig (16.3 MPa)		
Flow trip reference points *1) *2)		225 slpm	350 slpm	500 slpm	950 slpm	1100 slpm	1650 slpm	2600 slpm
Accuracy		±20% of trip point						
Proof pressure		5000psig (34.5 MPa)						
Burst pressure		10000psig (69 MPa)						
Ambient and operating temperature		-23 to 80 °C (No freezing)						
Leak rate	Inboard leakage	2×10^{-11} Pa·m³/s						
	Outboard leakage	2×10^{-11} Pa·m³/s						
Surface finish		Ra max 10 µin. (0.25 µm)						
Connections		1/2 inch face seal, Tube weld				3/4 inch face seal, Tube weld		
Pressure drop at trip point		0.5 psi (0.0034 MPa) differential *3)						
Reed switch	Type	SPDT, 3wire / 2 position						
	Power	DC 30 V (3 W max)						
	Switching current	0.2 A max						
	Carrying current	0.5 A max						
	Initial contact resistance	0.1 Ω max						
Cable	Wire gauge	AWG24 (PVC jacket)						
	Cable length	10ft. (3 m)						
	Lead color	Blue: common						
		Brown: normally closed						
		Black: normally open						
Mass		0.56 kg *4)						

*1) Trip point varies slightly with temperature change, ±2% over the specified operating range.
*2) At N_2 gas 100 psig (0.69 MPa). To obtain the nominal trip point in process gases other than nitrogen or pressures other than 100 psig (0.69 MPa), please refer to the Precautions on Selection (P.139).
*3) Pressure drop at trip point
*4) Mass, including individual boxed weight, may vary depending on connections or options.

Wetted Parts Material

Wetted Parts	S
Body	316L SS
Surface finish	Electropolish + Passivation
Float	316L SS
Metal gasket	Nickel 200

Dimensions

inch (mm)

AP74B

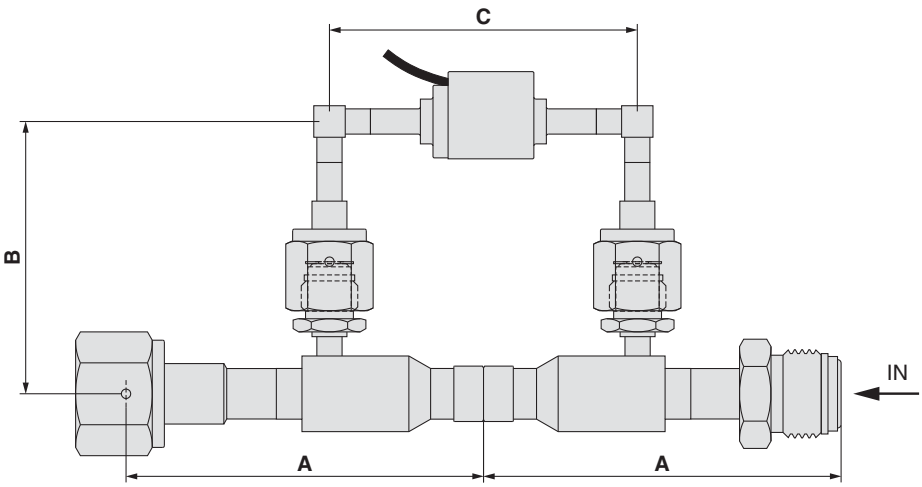

Connections	A		B				C	
			Horizontal		Vertical			
	inch	(mm)	inch	(mm)	inch	(mm)	inch	(mm)
MV8	3.55	(90.2)	4.55	(115.6)	2.70	(68.6)	3.05	(77.5)
FV8								
TW8	2.59	(65.8)						
MV12	5.51	(140.0)	5.44	(138.2)	3.59	(91.2)		
FV12								
TW12	3.53	(89.7)						

⚠ Precaution on Selection

Nominal flow trip reference points are at 100 psig (0.69 MPa) of N_2 gas.
In order to obtain the nominal trip point for operating pressure, other than 100 psig (0.69 MPa), and for gas, other than N_2, calculate the correction factors (Fp, Fg) with the following formula and then, multiply both factors.

1. Change in operating pressure

$$Fp = \sqrt{\frac{OP}{114.7}}$$

$$\left(Fp = \sqrt{\frac{OP_{MPa}}{0.79}} \right)$$

***OP*: Operating pressure (abs) psia**
(*OP_{MPa}*: Operating pressure (abs) MPa abs)

2. Change in gas type

$$Fg = \sqrt{\frac{28}{MW}}$$

***MW*: Molecular weight of the gas**

E.g) Nominal trip point when gas type is hydrogen gas (molecular weight: 2) and operating pressure is 0.5 MPa:

1. Calculation of Fp

$$Fp = \sqrt{\frac{(0.5 + 0.1)}{0.79}} = 0.871$$

2. Calculation of Fg

$$Fg = \sqrt{\frac{28}{2}} = 3.742$$

When using the flow switch, whose nominal trip point is 10 slpm (AP74010S□), under these conditions, its nominal trip point will be 32.6 slpm (10 (slpm) x 0.871 x 3.742 = 32.6 (slpm)).

Process Gas Equipment / Check Valve Specific Product Precautions

Be sure to read before handling. Refer to back cover for Safety Instructions and P. 145 and 146 and the "Operation Manual" for common precautions. Operation manual is available from the SMC web site. http://www.smcworld.com

Selection

⚠ Warning

1. Confirm the specifications.

This product is used in gas delivery systems to prevent reverse gas flow. This product can only supply gas from inlet to outlet side. When selecting the product, confirm the operating conditions, such as type of gas, operating pressure, flow rate, operating temperature etc., and use within the operating range specified in the catalog. The product may not be suitable for use with specific gases and applications/ environments. Check the compatibility of the product materials with the process gas. Confirm the compatibility of the product materials with the process gas in the catalog selection guide. Design the equipment and select the product by understanding the characteristics of gas.

Mounting

⚠ Caution

1. Confirm the mounting direction of the product.

An arrow is indicated on the product. The arrow points in the direction flow are allowed from the inlet side towards the outlet side.

Maintenance

⚠ Warning

1. AP64 check valves cannot be repaired.

AP Tech AP64 check valves are welded shut and internal problems usually cannot be repaired.

Operation

⚠ Caution

1. Do not use the check valve as shutoff valve.

Do not rely on a check valve exclusively to absolutely prevent any reverse flow, especially when the pressure differential is small. For situations where it is known the downstream pressure will exceed the upstream pressure, use a diaphragm valve to positively shut off reverse flow.

Process Gas Equipment / Vacuum Generator Specific Product Precautions

Be sure to read before handling. Refer to back cover for Safety Instructions and P. 145 and 146 and the "Operation Manual" for common precautions. Operation manual is available from the SMC web site. http://www.smcworld.com

Selection

⚠ Warning

1. Confirm the specifications.

This product is used in gas delivery systems to assist in purging of piping systems. When selecting the product, confirm the operating conditions, such as type of process gas being vented, nitrogen supply pressure and flow rate, vent line backpressure generated by the nitrogen supply flow rate, actuation pressure, operating temperature etc., and use within the operating range specified in the catalog. The product may not be suitable for use with specific gases and applications/ environments. Check the compatibility of the product materials with the process gas. Confirm the compatibility of the product with the process gas in the catalog selection guide.
Design the equipment and select the product by understanding the characteristics of gas.

Mounting

⚠ Caution

1. Confirm the mounting direction of the product.

Inlet port is labeled with "IN" mark and outlet port is labeled with "OUT" mark. Alternatively, the nitrogen flow direction may be indicated with an arrow instead of "IN" and "OUT" marks.Inlet and outlet ports run in line with each other. The vacuum port runs perpendicular to the inlet and outlet ports. The vacuum port may be labeled with "VAC" mark. Confirm the mounting direction and install at correct direction.

2. Connect actuation pressure to the valve actuator connection.

If an air operated valve is built in the product, connect actuation pressure to the valve actuator connection. Use nitrogen or clean dry air for actuation pressure.

Maintenance

⚠ Warning

1. If a product requires repair, contact SMC.

Operation

⚠ Warning

1. Supply nitrogen to the inlet port.

2. If an air operated valve is built in the product, use nitrogen or clean dry air for actuation pressure.

3. Apply nitrogen within the specified pressure range to the inlet port in order to generate a vacuum.

When applying nitrogen to the inlet port, vacuum will be generated. If a valve is built in the product, vacuum will be generated after applying nitrogen to the inlet port and opening the built-in valve. In the case of an air operated valve, it will open when applying actuation pressure to the actuation port. In the case of a manually operated valve, it will open when the handle is rotated counterclockwise until it completely stops.

4. Shut off nitrogen supply in order to shut off vacuum.

When shutting off nitrogen supply to the inlet port, vacuum will be shut off. If a valve is built in the product, vacuum will be shut off when closing the valve. In the case of an air operated valve, it will close when venting off actuation pressure. In the case of a manually operated valve, it will close when rotating the handle clockwise until it completely stops.

5. In the case the check valve is built in the product, back flow through the inlet port will be prevented when pressure on the vacuum or vent ports exceeds the inlet port pressure.

Check valve is used for preventing back flow through the inlet port when pressure on the vacuum or vent ports exceeds the inlet port pressure, regardless of whether the built-in valve is opened or closed, and regardless of whether or not the product has a constant bleed option. However, the check valve does not prevent back flow from the outlet port through the vacuum port.

6. If the product with built-in valve is selected with constant bleed option, when supplying nitrogen pressure to the inlet port, nitrogen will bleed through a small hole to the vacuum and vent ports even when the built-in valve is closed.

Process Gas Equipment / Flow Switch Specific Product Precautions

Be sure to read before handling. Refer to back cover for Safety Instructions and P. 145 and 146 and the "Operation Manual" for common precautions. Operation manual is available from the SMC web site. http://www.smcworld.com

Selection

⚠ Warning

1. Confirm the specifications.

This product is used in gas delivery systems to signal an increase in flow above a trip point. When selecting the product, confirm the operating conditions, such as type of gas, operating pressure, flow rate, operating temperature, etc., and use within the operating range specified in the catalog. The product may not be suitable for use with specific gases and applications/environments. Check the compatibility of the product materials with the process gas. Confirm the compatibility of the product with the process gas in the catalog selection guide.
Design the equipment and select the product by understanding the characteristics of gas.

2. Confirm the flow trip reference point of the product.

Flow trip reference point is fixed. Select the product which meets the desired flow rate. Flow trip reference point, specified in the How To Order, is the trip point value with nitrogen at 0.69 MPa inlet pressure. When the products are used with other inlet pressures or gases, use the conversion formula to calculate the flow trip reference point for such application.

Mounting

⚠ Caution

1. Do not drop or bump the products.

When dropping, bumping, or applying excessive impacts to the products, it may damage inside of the product and cause malfunction.

2. Confirm the mounting direction of the products.

An arrow is indicated on the product. In the case of the AP74B Series, an arrow is indicated on the bypass line. The arrow points in the forward flow direction from inlet port to outlet port.

3. Install the products vertically with the inlet port on the bottom in order to supply gases from bottom to top.

In the case of the AP74 Series, install the product within 8 degrees of vertical in order to supply gas from bottom to top. In the case of the AP74B Series, install the product with its arrow indicated on the bypass line within 8 degrees of vertical in order to make its arrow direction upward.

Wiring

⚠ Warning

1. Avoid bending repeatedly or stretching the lead wires.

Lead wire may break when applying bending stress repeatedly or stretching force to the lead wires.

2. Do not wire in conjunction with power lines or high voltage lines.

Wire separately from power lines and high voltage lines and avoid wiring in the same conduit with these lines. Close proximity between power lines or high voltage lines and the product may result in malfunction due to electrical noise.

Wiring

⚠ Warning

3. Confirm proper insulation of wiring.

Make sure that there is no insulation failure (contact with other circuits, insulation failure between terminal, etc.). Damage may occur due to excessive current applied to the product.

4. Connect wires properly.

Use brown and blue wires for normally closed contact installation.
Use black and blue wires for normally open contact installation.

5. Do not connect wiring while product is energized.

6. Make sure to connect a load before energizing the product.

Energizing the product without connecting a load (load short-circuit) can create excessive current and damage the switch.

7. Confirm operation of the product by supplying nitrogen after installation and wiring.

Confirm the product trips when supplying nitrogen above the flow trip reference point and that it resets when the flow is shut off.

Operating Environment

⚠ Warning

1. Do not use in an area, where a magnetic field is generated. It may cause malfunction.

Maintenance

⚠ Warning

1. AP Tech flow switches cannot be repaired.

AP Tech flow switches are welded shut and internal problems usually cannot be repaired.

Operation

⚠ Warning

1. Initial pressurization of system lines can cause a temporary flow surge that trips the flow switch.

Confirm flow switch resets once system lines are filled with gas. If it does not reset after system lines are filled, stop supplying gas and check for leakage of the system.

Technical Data/Glossary of Terms

1. Applications

[Process Gas]
A generic term describing gases used in manufacturing which contact the product being manufactured (processed).

[Specialty Gas]
A generic term describing gases stored in cylinders (bottles). These gases range from non-hazardous inert to hazardous - corrosive, poisonous, flammable, oxidizer and pyrophoric.

[Bulk Gas]
A generic term used to describe gases stored in large vessels. The most common bulk gases are stored in liquid phase, such as nitrogen and oxygen.

[CDA]
Clean dry air, generally supplied by a compressor rather than a cylinder (bottle).

[Ultra High Purity (UHP)]
A term common to the semiconductor industry and other clean industries such as solar, LED and flat panel display, used to describe extremely high purity and very low contamination requirements. Gases are of the highest level of purity attainable and gas handling systems and components are designed to maintain such purity without contributing contamination to the gas stream.

[General Applications]
This term indicates all industries other than semiconductor and clean industries such as solar, LED and flat panel display, and applications that are not UHP.

[Source (Cylinder) Applications]
Defines products used at gas storage vessel, such as a cylinder (bottle) pressure regulator used to decrease source pressure to a lower line pressure. For the purposes of this catalog, components are defined as 'source' if they are the cylinder pressure regulator or upstream of the cylinder regulator.

[Distribution Applications]
Defines products used downstream of source regulator which includes point of use, distribution panels such as valve manifold boxes (VMB) and within the process tool. For the purposes of this catalog, components downstream of the source regulator are defined as 'distribution'.

[Bulk Gas Applications]
Defines products used for source and distribution applications of bulk gases, including BSGS (bulk specialty gas systems).

[Sub–atmospheric Applications]
Source and distribution applications where pressure delivery is less than atmospheric pressure. This is common for low vapor pressure specialty gas delivery.

2. Products

[Regulator]
A control valve that works by reducing the valve inlet pressure and delivering a lower outlet pressure. Most AP Tech regulators are non-relieving type, which means pressure above set point is not vented automatically.

[Single stage]
Single stage pressure regulators drop pressure only once in a single step.

[Two stage]
Two stage regulation drops pressure twice, in two steps. A two stage regulator is simply two regulators in series with a common body. Two stage regulations are two separate regulators in series.

[Tied-diaphragm]
This is a regulator design in which the diaphragm and poppet are linked together. The tied diaphragm feature pulls the poppet closed as the pressure rises above set point and stops leak due to contamination or some other failures.

[Springless Regulator]
These are pressure regulators which do not have wetted springs below the poppet. The diaphragm and poppet are linked, as with the tied diaphragm, but it is also does not have a poppet spring.

[Back pressure regulator]
This is a control valve that if the pressure on the inlet side exceeds a set level, the over pressure is vented to outlet side to keep the inlet pressure stable.

[Diaphragm valve]
This is a shut off valve which uses a diaphragm for a moving element to open and close the valve. Springless diaphragm valves do not have a wetted spring. Diaphragm valves from AP Tech are two way valves, available with multiple ports.

[LOTO]
Stands for Lock-out/Tag-out and is used to ensure worker's safety.
Lock-out refers to physically locking the device to shutoff gas supply to equipment. Tag-out refers to the practice of attaching a warning tag to the device to prevent potential accidents caused by erroneous operations.

[Purge port]
Purge ports can be located on the inlet and/or outlet side of the valve. It can be used in applications, such as applying purge gas when welding on the line or maintenance service while valve is closed.

[Check valve]
A check valve is a safety device intended to prevent reverse flow. The AP 64 is a unique design with only one moving part in the gas stream, an O-ring. It is a springless design, free of springs and poppets.

[Vacuum generator]
A venturi device that creates vacuum by flowing gas through a nozzle. The AP 71 and 72 are module devices which combine a supply valve and check valve with the venturi.

[Constant bleed]
A feature that provides a continuous flow of gas through the valve via an orifice when it is closed. This feature is used with the AP 71 and AP 72 series to keep exhaust lines inert. It is also available as an option to certain standard shut off valves to provide a bleed to keep the cylinder connection inert while disconnected from a cylinder.

[Flow switch]
A sensor that detects excess flow above a given flow rate, caused by pipe breakage etc.
Note that the AP 4 and AP 74B series are simple switches and do not have a flow rate display function.

3. Materials

[316 SS]
An austenitic stainless steel with a higher nickel content to improve its corrosion resistance.

[316L SS]
A low-carbon form of 316 SS which has better intergranular corrosion resistance than 316 SS.

[316L SS secondary remelt]
A high-grade form of 316L SS to reduce impurities to the utmost limit.
AP Tech 316L SS secondary remelt steel conforms to the SEMI standard F20 UHP grade.

[Hastelloy®] Trademark of Haynes International
A nickel-chromium-molybdenum alloy with excellent corrosion resistance.

[Elgiloy®] Trademark of Elgiloy Specialty Metals
A cobalt-chromium-nickel alloy with excellent corrosion resistance and superelasticity. This material is used as diaphragm of the diaphragm valves.

[PCTFE]
Poly Chloro Tri Furuoro Ethylene. This is high transparency fluoroplastic material with mechanically superior in rigidity and excellent low temperature. This material is used as standard seat material of the regulators and diaphragm valves.

[PTFE]
Fully fluorinated material. This is virtually chemically inert. PTFE should have equivalent or superior chemical compatibility compared to PCTFE in every application.
PTFE (TF) option available for the AP 500, AP, AZ & AK 1000 & 1100 and AZ & AK 1300. The primary application for this material is for pressure regulators inside process tools.

[Vespel®] Trademark of DuPont
Plastic with excellent heat resistance (polyimide resin). This material has excellent heat and wear resistance. This seat is available as an option for high temperature applications or specific gas applications, such as N_2O or CO_2.

[PEEK]
Polyetheretherketone. This material has excellent heat, fatigue and chemical resistances as thermoplastic resin. This seat is available as an option for the regulators.

[FKM]
Fluoro-rubber (FKM). This material has excellent heat and chemical resistances.

[FFKM]
Perfluoroelastomer (FFKM). This material has excellent heat and chemical resistances compared to fluoro-rubber (FKM).

4. Surface treatment

[Electropolish]
Commonly referred to as EP, is an electrolytic process for metals to enhance a surface chemistry and smooth the surface finish.

[Passivation]
A process for metals to form a passivation layer on the surface, typically by removing surface Fe in a nitric acid bath.

5. Connections

[Face seal fitting]
A fitting type in which a metal gasket effects a seal with mating fittings, forming high leak integrity, metal to metal seal. The most common face seal fitting is VCR® compatible type.

[Tube weld]
Components with tube stubs are installed by welding into the piping system directly without using fittings.

[Compression fitting]
A self aligning tube fitting that uses a ferrule to compress on the tubing effecting a seal when the nut is tightened. A common compression fitting is that of Swagelok®.

[NPT]
A tapered pipe thread which is a U.S.A standard (ANSI).

6. Specifications

[Surface finish Ra]
Surface finish of the inner surface (wetted parts). A standard for measuring surface roughness which averages the peak to valley of the surface profile over a given distance (stroke). Multiple readings on a part are also averaged for Ra, but for Ra max, the worst reading is the value for that part.

[Cv factor]
The flow coefficient, Cv, is defined as the volume of 15.6°C water passing through a valve with specific differential inlet to outlet pressures. Cv is calculated in accordance with the SEMI standard F32. Cv measurements of regulators are taken with the orifice of the regulators wide open.

[Cracking pressure]
This is the pressure at which a check valve first opens and achieves a given flow rate as pressure increase.

[Ultimate vacuum]
The maximum vacuum generated by a vacuum generator.

[slpm]
Abbreviation for standard liter per minute.
Indicates the volumetric flow in liters per minute of time at standard conditions of a temperature of 0°C and a pressure of 1 atmosphere.

[Supply pressure effect]
The change in a pressure regulator's outlet pressure resulting from a change in source (supply) pressure. The most typical is an increase in outlet pressure as the inlet pressure decays – often stated as a given rise per a given drop in pressure.

[Inboard leakage]
Leakage rate from outside to inside of the products occurring when an internal pressure is less than the external pressure. This can be detected by spraying helium on outside of the products and detecting helium entering into the products from any leak path while internal cavities are evacuated. This detection method conforms to the SEMI standard F1.

[Outboard leakage]
Leakage rate from inside to outside of the products occurring when an internal pressure is more than the external pressure. This can be detected by pressurizing helium inside the products and detecting helium leaking outside from the products. This detection method conforms to the SEMI standard F1.

[Across the seat leak]
Leak rate from inlet to outlet of a device in the closed position. Often also referred to as 'internal leakage' meaning leak is only internal from inlet to outlet side.

[SEMI standards]
Voluntary standards issued by Semiconductor Equipment and Materials International (SEMI) an international industry association made up of companies that supply manufacturing equipment, materials and related services to the semiconductor, flat panel display, nanotechnology, MEMS, solar power generation and other related industries.

Process Gas Equipment Common Precautions 1

Be sure to read before handling.

Design

⚠ Warning

1. Confirm the specifications.

The compatibility of the product with specific equipment must be decided by the person who designs the equipment or decided its specifications based on necessary analysis and test results. The expected performance and safety assurance of the equipment will be the responsibility of the person who has determined its compatibility with the product.

Selection

⚠ Warning

1. Confirm the specifications.

When selecting the product, confirm the operating conditions, such as type of gas, operating pressure (inlet and outlet), flow rate, operating temperature etc., and use within the operating range specified in the catalog. The product may not be suitable for use with specific gases and applications/ environments. Check the compatibility of the product materials with the process gas.
Design the equipment and select the product by understanding the characteristics of gas.

2. Follow the regulations and laws, defined by the country or local government, or organization standards.

Reference: High Pressure Gas Safety Act, Labor Safety and Sanitation Law etc.

Mounting

⚠ Warning

1. Operation Manual

Mount and operate the product after reading the manual carefully and understanding its contents. Also keep the manual where it can be referred to as necessary.

⚠ Caution

1. Flush the piping thoroughly with inert gas before installing the products.

Remove any dust or scales thoroughly as they could cause malfunction or failure of the product. Do not flush with gas other than inert gas, as this could cause dangerous situations.

2. Do not touch the fitting or the wetted parts of the products by hand. Do not apply grease or oil to the products.

3. Unpack the hermetically-sealed package under clean environment (other than AK series).

The products intended for high purity processes are double packed inside the clean room. Make sure to unpack the sealed inner bag inside the clean room or clean environment.

4. Ensure sufficient space for maintenance activities.

Ensure sufficient space for maintenance activities.

Mounting

⚠ Caution

5. Connect face seal fittings.

Follow the procedures, recommended from the fitting manufacturer, to connect properly.
Typically 1/8 turn past finger tight of the nut.

6. Connect tube welds.

Follow the industry standards (refer to SEMI F78) to weld the piping.

7. Connect compression fittings.

Follow the procedures, recommended from the fitting manufacturer, to connect properly.
Typically 1-1/4 turn past finger tight of the nut after inserting the tube into the fitting.

8. Connect NPT thread fittings.

Thread fitting or piping into body and tighten it at recommended torque. When holding the product, hold its body section.
Apply PTFE tape or sealant on the thread of the piping, fitting, etc. When using the sealant, other than the PTFE, it will be difficult to fully remove the sealant and this could cause malfunction or failure of the product.

9. After installation, perform a leak test.

Perform a leak test, such as helium leak test, pressure decay test, bubble leak test, etc., depending on the application. It is recommended to perform a helium leak test on all face seal connections and tube welds per the industry standards (refer to SEMI F1).

Storage and Operating Environment

⚠ Warning

1. Do not use in an area having chemicals, sea water or water, or where there is direct contact with any of these.

2. Do not use in a place subject to heavy vibration and/or shock.

3. Keep ambient temperature and use gas within the specified operating temperature. Remove any sources of excessive heat.

4. Do not keep the products in stock in an area, where any dust or water coming in, and keep in dry conditions, where there is no contact with humidity.

Process Gas Equipment Common Precautions 2

Be sure to read before handling.

Maintenance

⚠ Warning

1. Perform a routine maintenance.

Perform a routine maintenance at customer's responsibility by taking into consideration the operating conditions of the equipment. It is recommended to perform a routine maintenance for the following:
External leakage, Internal leakage (Across the seat leak), Performance etc.

2. Shut down system before removing the product from system for repair or replacement.

Follow the proper procedures to shut off the process gas supply and vent the system.

3. Purge hazardous gases from system before removing the product from system.

4. Do not disassemble products under warranty.

The warranty may be voided if product is disassembled.

Operation

⚠ Warning

1. Do not put the heavy objects on the products. Do not use the products as scaffold.

2. Do not use the products in conditions that do not meet the product specifications.

Product Returns

When returning the product to SMC, make sure to properly purge to remove all hazardous materials and return the product complying with SMC specified procedures.
For details, please contact SMC.

Export

⚠ Warning

The products fall within the United States Export Administration Regulations (EAR) regarding sale, export and re-exports. It is the exporter's responsibility to assure that these regulations are followed when the products are exported. Export Control Classification Number (ECCN) related to the products is as follows.
Regulations (including ECCN) are subject to change with amendment of law.
Latest information regarding these regulations should be checked by customer.

Reference: Bureau of Industry and Security (USA)
http://www.bis.doc.gov/

1) **2B350.g.2** <Applicable conditions>
   (1) Product name : Regulator, Diaphragm valve
   (2) Body material : Hastelloy®
   (3) Connection size : 1/2 inch or more
2) **2B999.g** <Applicable conditions>
   (1) Product name : Regulator, Back pressure regulator, Diaphragm valve, Check valve, Vacuum generator module (integrated with valve and check valve)
   (2) Body material : 316 SS, 316L SS, 316L SS secondary remelt, Hastelloy* regardless of connection size.
   * 2B350.g.2 supersedes for regulator and diaphragm valve of Hastelloy body with 1/2 or more connection size.
3) **EAR99** <Applicable conditions>
   (1) Regulator and Back pressure regulator with brass bodies
   (2) Vacuum generator, Flow switch, Other options (Pressure gauge, LOTO)

SMC

⚠ Safety Instructions

These safety instructions are intended to prevent hazardous situations and/or equipment damage. These instructions indicate the level of potential hazard with the labels of **"Caution", "Warning"** or **"Danger"**. They are all important notes for safety and must be followed in addition to International Standards (ISO)*1), Japan Industrial Standards (JIS)*2) and other safety regulations*3).

⚠ Caution: Operator error could result in injury or equipment damage.

⚠ Warning: Operator error could result in serious injury or loss of life.

⚠ Danger : In extreme conditions, there is a possibility of serious injury or loss of life.

*1) ISO 4414: Pneumatic fluid power -- General rules relating to systems.
*2) JIS B 8370: General rules for pneumatic equipment.
*3) High Pressure Gas Safety Act, Labor Safety and Sanitation Law etc.

⚠ Warning

1. **The compatibility of the product is the responsibility of the person who designs the equipment or decides its specifications.**
   Since the product specified here is used under various operating conditions, its compatibility with fluid and specific equipment must be decided by the person who designs the equipment or decided its specifications based on necessary analysis and test results.
   The expected performance and safety assurance of the equipment will be the responsibility of the person who has determined its compatibility with the product.
   This person should also thoroughly review all specifications of the product referring to its latest catalog information, with a view to giving due consideration to any possibility of equipment failure when configuring the equipment.
2. **Only personnel with appropriate trainig should install and operate machinery and equipment.**
   The product specified here may become unsafe if handled incorrectly.
   The assembly, installation operation maintenance of the given equipment including our products must be performed by an operator who is appropriately trained and experienced.
3. **Do not service or attempt to remove product and machinery/equipment until safety is confirmed.**
   1. The inspection and maintenance of machinery/equipment should only be performed after measures to prevent falling or runaway of the driven objects have been confirmed.
   2. When the product is to be removed, confirm that the safety measures as mentioned above are implemented and the power from any appropriate source is cut, and read and understand the specific product precautions of all relevant products carefully.
   3. Before machinery/equipment is restarted, take measures to prevent unexpected operation and malfunction.
4. **Contact SMC beforehand and take special consideration of safety measures if the product is to be used in any of the following conditions.**
   1. Conditions and environments outside of the given specifications, or outdoors (use in a place protected from adverse environmental).
   2. Installation on equipment in conjunction with atomic energy, railways, air navigation, space, shipping, vehicles, military, medical treatment, combustion, or recreation, or equipment in contact with food and beverages, emergency stop circuits, clutch and brake circuits in press applications, safety equipment or other applications unsuitable for the standard specifications described in the product catalog.
   3. An application which could have negative effects on people, property, or animals requiring special safety analysis.

⚠ Caution

1. **The product is provided for use in manufacturing industries.**
   The product herein described is basically provided for peaceful use in manufacturing industries.
   If considering using the product in other industries, consult SMC beforehand and exchange specifications or a contract if necessary.
   If anything is unclear, contact your nearest sales branch.

Limited Warranty and Disclaimer/ Compliance Requirements

The product used is subject to the following "Limited Warranty and Disclaimer" and "Compliance Requirements".
Read and accept them before using the product.

Limited Warranty and Disclaimer

1. The warranty period of the product is 1 year after the product is delivered to customer from SMC.
2. For any failure or damage reported within the warranty period which is clearly our responsibility, a replacement product or necessary parts will be provided.
   This limited warranty applies only to our product independently, and not to any other damage incurred due to the failure of the product.
3. Prior to using the products, please read and understand the warranty terms and disclaimers noted in the specified catalog for the particular products.

Compliance Requirements

1. When the product is exported, strictly follow the laws required by the Ministry of Economy, Trade and Industry (Foreign Exchange and Foreign Trade Control Law).
2. The products printed in the catalog are USA manufactured products of AP Tech. As such, they fall within the United States Export Administration Regulations (EAR) regarding re-exports.
   It is the exporter's responsibility to assure that these regulations are followed when the products are exported.

⚠ Safety Instructions	Be sure to read "Operation Manual" before using.

SMC Corporation
Akihabara UDX 15F,
4-14-1, Sotokanda, Chiyoda-ku, Tokyo 101-0021, JAPAN
Phone: 03-5207-8249 Fax: 03-5298-5362
http://www.smcworld.com

Specifications are subject to change without prior notice and any obligation on the part of the manufacturer.
D-G
1st printing PV printing PV 7850SZ Printed in Japan.